CaliPile™

Infrared Sensing Solutions

TPiS 1C 0987 / 7360

Product Specification

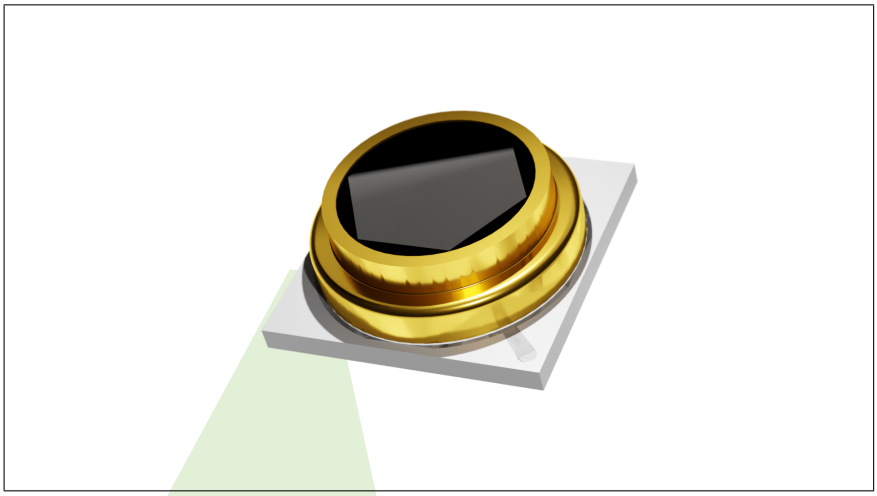

Ultra Compact Multi-Function Thermopile Sensor

The TPiS 1C 0987 is the most compact thermopile sensor within the Excelitas CaliPile™product family.

The sensor detects both, the ambient temperature of the sensor and, without physical contact, the temperature of objects by measuring optically the far-infrared heat radiation emitted by these objects. For both temperature measurements medical grade accuracy can be achieved, and each unit comes individually pre-calibrated. Advanced technology suppresses potential error signals that may arise from thermal shock or changing environmental conditions.

Its small size predestinates CaliPile™Mini for use in devices where the smallest possible footprint is combined with highest accuracy, such as wearables for body temperature measurement or similar IoT devices.

The sensor features a digital signal processing and I^2C communication that is compatible with all CaliPile™products. The temperature calculation is done using an external microcontroller. The sensor includes non-volatile memory to store calibration parameters necessary for this calculation.

3.3 V is the typical sensor operation voltage, but the communication is compatible with most 1.8 V interfaces.

The digital signal processing features smart data treatment and a flexible interrupt engine that allows for much more than the traditional temperature measurement. Once configured via the I^2C interface the sensor can be used to monitor motion, presence, and temperature limits independently from the host systems and e.g. trigger a system wake-up and alarms.

In combination with its very low power consumption, CaliPile™Mini is the ideal solution to wake-up battery-operated devices. The low supply current of typical only 15 µA for under normal condition operation allows extended operation on battery.

Features

- $3.1 \times 3.1 \times 1.2\,mm^3$ LGA package
- Medical grade accuracy option available
- Excelent thermal shock sensitivity
- 80° Field-of-View
- very low power consumption, typ. 15 µA
- Factory calibration for ambient and object temperature
- Digital signal processing and I^2C interface
- Interrupt function for presence, motion, over-temperature

Applications

- non-contact temperature measurements e.g. body temperature in fitness tracking, smart home and IoT devices
- Wake-up sensor, e.g. for battery operated devices
- Near-field presence, proximity and motion sensing, e.g. for auto wake-up of user interface devices
- Fast remote over- or under-temperature protection, e.b. in home or industrial applications

excelitas®

Issued: 15/01/2026 / Revised: 10/08/2026

Contents

1 Functional Diagram **3**

2 Dimensions and Connections **3**

3 Optical Characteristics **5**
3.1 Field of View . . . 5
3.2 Filter Properties . . . 6

4 Absolute Maximum Ratings **7**

5 Device Characteristics **8**

6 I^2C Interface Characteristics **11**
6.1 START and STOP conditions . . . 11
6.2 Clock low extension . . . 12
6.3 Slave Address . . . 12
6.4 Protocol diagram description . . . 12
6.5 General Call . . . 13
6.6 Reading Data from the Register . . . 13
6.7 Writing Data to Register . . . 13
6.8 Reading EEPROM . . . 14

7 Data processing characteristics **16**
7.1 Control and Status Registers . . . 16
7.2 Control Register Details . . . 17

8 Internal processing overview **22**
8.1 Object and Ambient Temperatures . . . 22
8.2 Presence Detection . . . 22
8.3 Motion detection . . . 24
8.4 Ambient temperature shock detection . . . 24
8.5 Object temperature over or under limit detection . . . 25
8.6 Hysteresis . . . 25

9 Temperature Measurement **26**
9.1 Calibration Conditions . . . 26
9.2 EEPROM content . . . 26
9.3 EEPROM Details . . . 27
9.4 Calculation of the Ambient Temprature . . . 31
9.5 Calculation of the Object Temperature . . . 31
9.6 High Accuracy Temperature Measurement . . . 31
9.7 NETD Dependence on Filter Settings . . . 32

10 Integration instructions and recommendations **33**
10.1 PCB layout and Wiring Patterns . . . 33
10.2 Power Supply Stability . . . 33
10.3 Position . . . 33
10.4 Footprint . . . 34
10.5 Re-flow soldering . . . 34

11 Packaging Specification **36**
11.1 General Information 36
11.2 Carrier Tape 36

12 Statements **38**

1 Functional Diagram

Figure 1: Functional Diagram

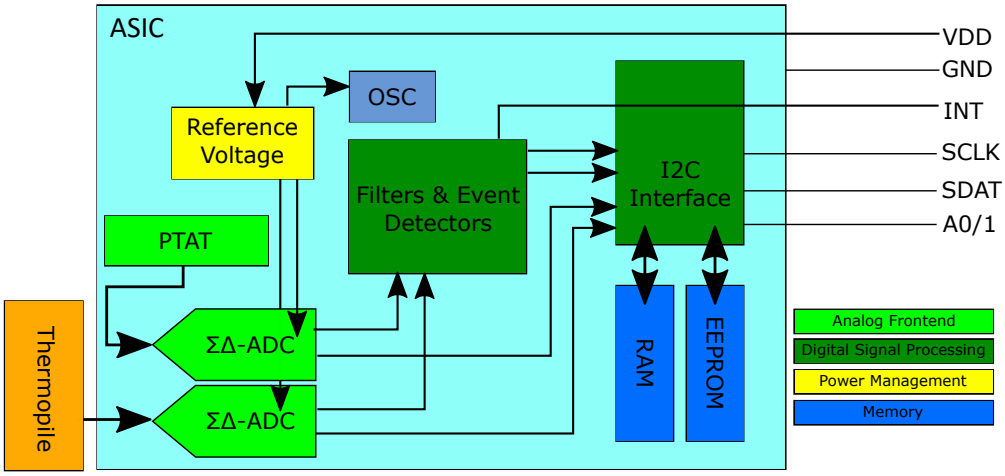

The functional diagram 1 illustrates the functional blocks of the TPiS 1C 0987 . The thermopile is digitized through a low noise high resolution ADC. Together with the reference sensor temperature channel (PTAT), the data is serialized into the RAM, which is accessible through the I^2C interface. Additionally a filter and event logic unit is updated, featuring various low pass filter options and applicaiton specific processing units. These units can be programmed to send interrupts to the host system. The ASIC stored factory calibration data is accessible through the I^2C interface and must be recalled to calculate the sensor temperature and the object temperature on the host system. The sensor must be configured after each power up.

2 Dimensions and Connections

Figure 2: Mechanical Dimensions (in mm) .

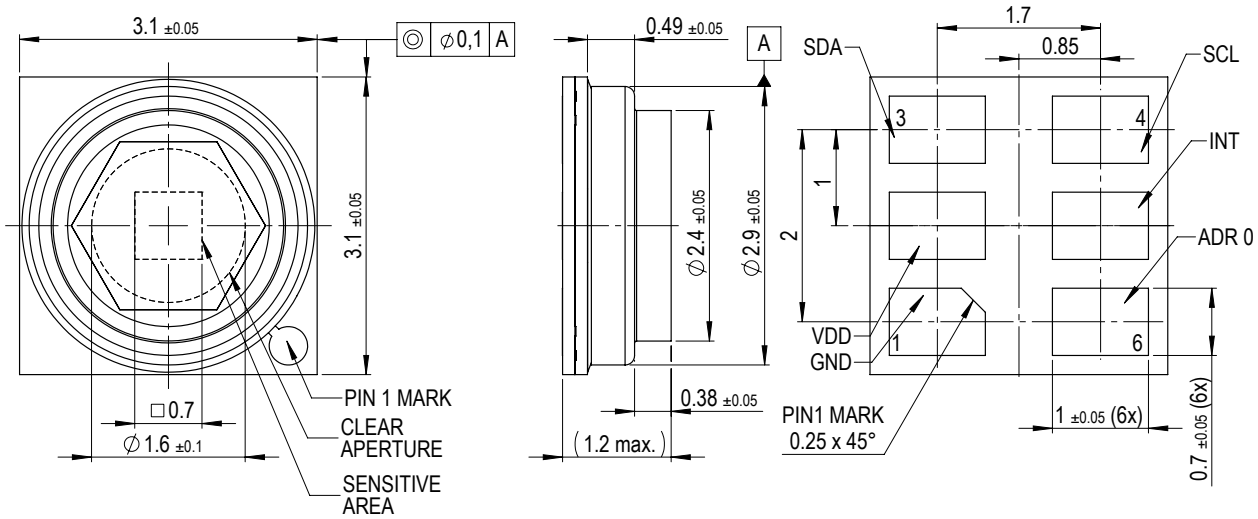

Excelitas Technologies GmbH & Co. KG
Wenzel-Jaksch-Str. 31
65199 Wiesbaden Germany
Tel.: +49 (0)611 492 430

Figure 3: Pin Configuration. Top View. A short description is given in table 1.

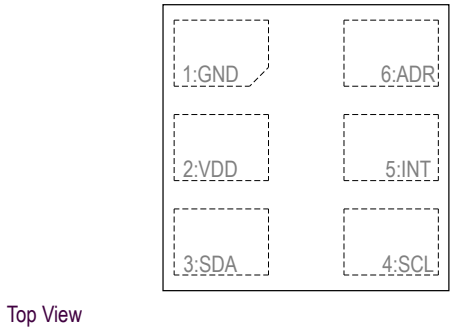

Table 1: Pin descriptions. Further explanations follow in this document.

Pin Symbol	Pin Name and short Functional Description.	Pin Type
ADR	**Address Input** Setting the two last bits of the slave address. Setting a pin to GND corresponds to bin 00. Setting a pin to VDD corresponds to a bin 11. The device address with pin set to GND is **0x0C**.	Input
VSS	**Ground**: The ground (GND) reference for the power supply should be set to the host ground.	Power
VDD	**Power Supply**: The power supply for the device. Typical operating voltage is 3.3 V	Power
SDA	**Serial Data**: The I^2C bidirectional data line. Open-drain driven and requires pull-up resistors to min. 1.8 V	Input/Output
SCL	**Serial Clock Input**: The I^2C clock input for the data line. Up to 400 kHz are possible. The host must support clock stretching.	Input/Output
INT	**Interrupt Output**: The open drain / active low Interrupt output to indicate a detected event. Reading the chip register out resets this output.	Output

Excelitas Technologies GmbH & Co. KG
Wenzel-Jaksch-Str. 31
65199 Wiesbaden Germany
Tel.: +49 (0)611 492 430

3 Optical Characteristics

3.1 Field of View

Figure 4 illustrates the measurement of the sensor's field of view (FOV). A hot point like heat source radiates almost parallel infrared light in a distance to the sensor. The sensor's housing is rotated around its sensor plane in all directions while recording the sensor data. A typical measurement result is shown in figure 5. The result is normalized to the peak value of the measurement. The resulting parameters are depicted in table 2.

Figure 4: Illustration of the FOV measurement setup. For details see the text.

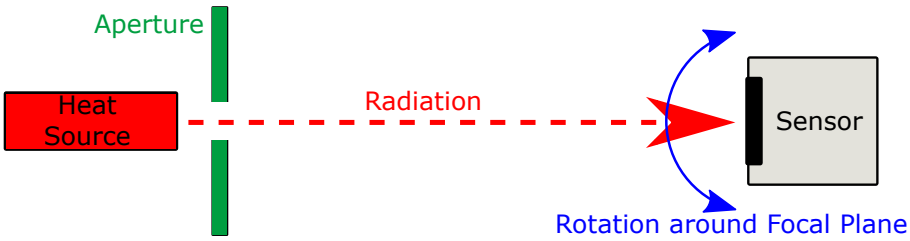

Figure 5: Typical FoV measurement result

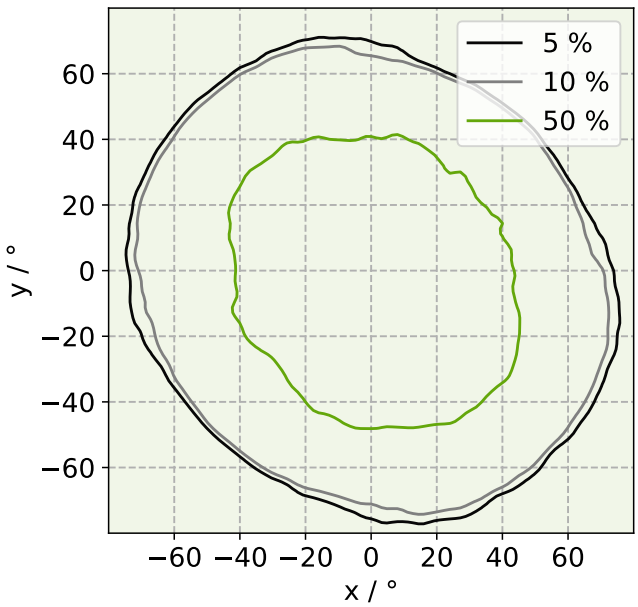

Table 2: Optical characteristics

Parameter	Symbol	Min	Typ	Max	Unit	Remarks / Conditions
Field of View	FOV		80		°	at 50 % intensity
Optical Axis		−10	0	10	°	

Excelitas Technologies GmbH & Co. KG
Wenzel-Jaksch-Str. 31
65199 Wiesbaden Germany
Tel.: +49 (0)611 492 430

3.2 Filter Properties

Table 3: Filter properties

Parameter	Symbol	Min	Typ	Max	Unit	Remarks / Conditions
Average Filter Transmittance	T_A		50		%	$2\,\mu m < \lambda < 15\,\mu m$

Figure 6: Filter transmittance, typical curve

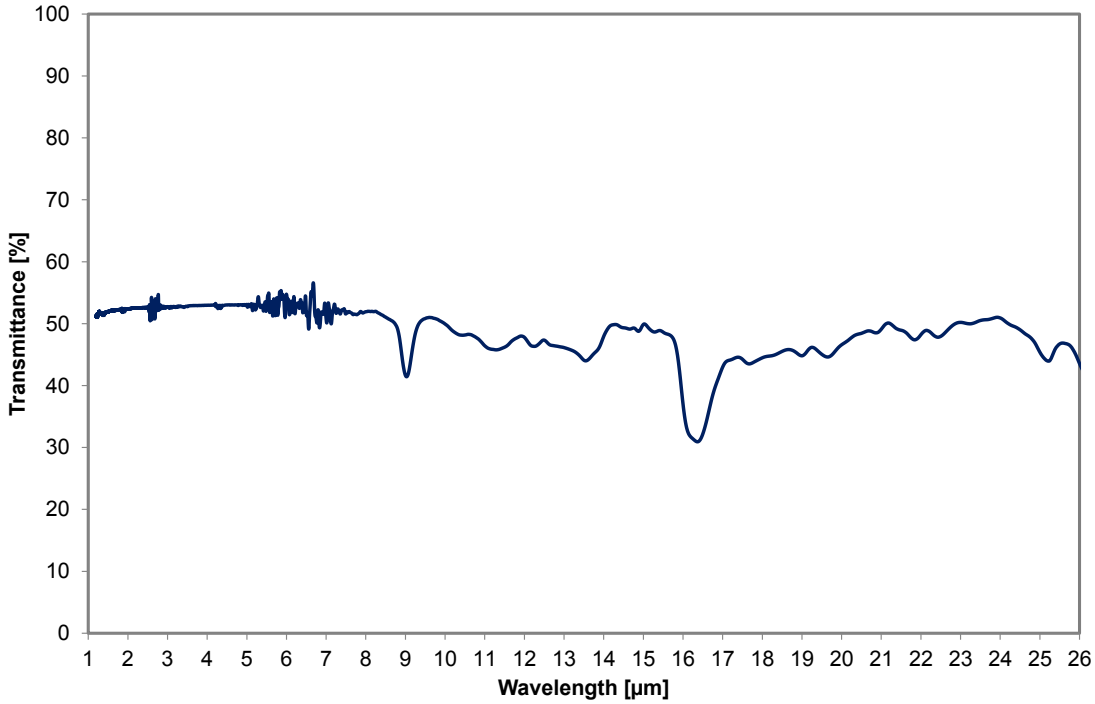

Excelitas Technologies GmbH & Co. KG
Wenzel-Jaksch-Str. 31
65199 Wiesbaden Germany
Tel.: +49 (0)611 492 430

4 Absolute Maximum Ratings

Table 4: Maximum Ratings

Parameter	Symbol	Min	Max	Unit	Remarks / Conditions
Operating Temperature	T_0	−20	85	°C	Electrical parameters may vary from specified values in accordance with their temperature dependence
Storage Temperature	T_s	−40	100	°C	Avoid storage in humid environment
Supply Voltage	VDD	−0.3	3.6	V	
Current to any pin		−100	100	mA	One pin at a time

Excelitas Technologies GmbH & Co. KG
Wenzel-Jaksch-Str. 31
65199 Wiesbaden Germany
Tel.: +49 (0)611 492 430

5 Device Characteristics

Device characteristics are given at 25 °C ambient temperature unless stated otherwise.

Table 5: Power Supply

Parameter	Symbol	Min	Typ	Max	Unit	Remarks / Conditions
Operating Voltage	VDD	2.6	3.3	3.6	V	For high accuracy see sec. 10.2
Supply Current	IDD			15	µA	VDD=3.3 V, ECR bit = 0x00 (see sec. 6.8)
Supply Current	IDD		50		µA	VDD=3.3 V, ECR bit <> 0x00 (see sec. 6.8)

Table 6: Thermopile

Parameter	Symbol	Min	Typ	Max	Unit	Remarks / Conditions
Sensitive Area	A		0.5		mm^2	Absorber $0.7 \times 0.7\,mm^2$
Sensitivity	$\Delta counts/\Delta T$		30		counts/K	Tobj=40 °C
Noise(rms)	NETD		60		mK	Tobj=25 °C, see sec. 9.7
Time constant	τ		43		ms	TP_{OBJ}
Power up time			250		ms	TP_{OBJ} and TP_{AMB} stable
Resolution			17		Bits	
Resolution		0.7	0.8	0.9	µV/count	
Offset		64 000	64 500	65 000	counts	
Max. Object Temp.	$Tobj_{max}$		400		°C	Full FOV, $\epsilon > 99\,\%$

The TPiS 1C 0987 temperature measurement is specified for a full field-of-view coverage by a black body with more than 99 % emissivity.

Table 7: Ambient temperature sensor (PTAT)

Parameter	Symbol	Min	Typ	Max	Unit	Remarks / Conditions
Resolution			15		Bits	
Slope			170		counts/K	−20 °C to 85 °C
Range		−20		85	°C	
Linearity		−5		5	%	−20 °C to 85 °C
Offset		11 000	13 500	17 000	counts	
Noise(rms)			5		mK	

The calculation of a temperature has to be performed on the host system and is described in section 9. Figure 7 shows the calculated thermopile raw data $U = TP_{object}$ as a function of the ambient temperature and object temperature based on typical characteristics of TPiS 1C 0987 . The ASIC typically features a wider dynamic range as compared to the specified values in table 6 and 7. Values out of our specifications are not guaranteed. Figure 8 gives an overview on the accuracy of a remote temperature measurement which can be achieved with the factory calibration. The calibration parameters and conditions are described in section 9. The performance in the application may vary due to physical constraints. Please consult our local representative for more information. The data retention time as quoted in table 10 depends on the lifetime temperature budget the sensor is exposed to. The table provides data for the worst case condition which is permanent operation at the maximum temperature. For details on how to estimate the data retention period see the corresponding application note.

Excelitas Technologies GmbH & Co. KG
Wenzel-Jaksch-Str. 31
65199 Wiesbaden Germany
Tel.: +49 (0)611 492 430

Figure 7: Typical temperature dependence of the raw thermopile output

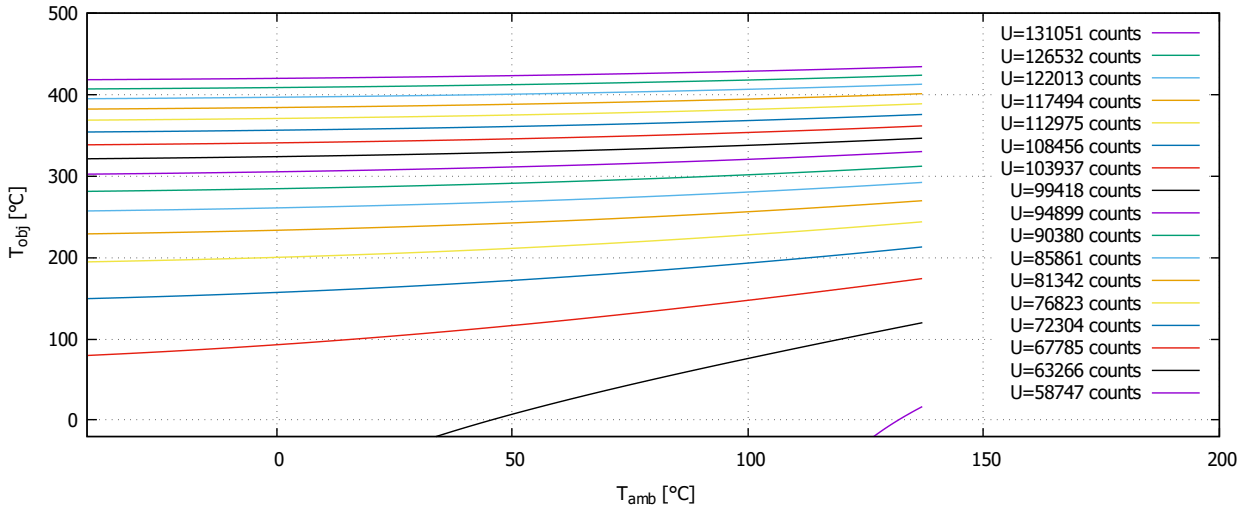

Figure 8: Sensor's minimum accuracy as measured according to section 9.

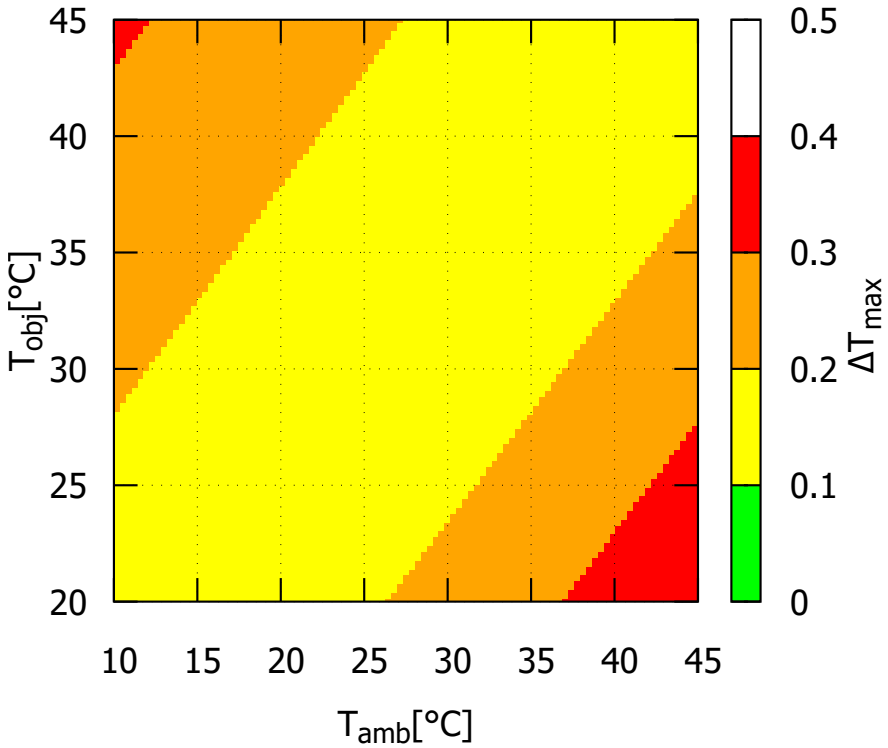

Excelitas Technologies GmbH & Co. KG
Wenzel-Jaksch-Str. 31
65199 Wiesbaden Germany
Tel.: +49 (0)611 492 430

Table 8: Digital Interface (SCL, SDA, INT, A0, A1)

Parameter	Symbol	Min	Typ	Max	Unit	Remarks / Conditions
Input low voltage	V_{IL}	-	-	0.6	V	
Input high voltage	V_{IH}	1.5	-	-	V	
Output low voltage	V_{OL}	0.2	-	-	V	
Output high voltage	V_{OH}	-	-	VDD	V	Open Drain
Input leakage current	I_{LI}	−1	-	1	µA	V_I = VDD/2
Output leakage current	I_{LO}	-	-	1	µA	V_O = VDD
SCL Frequency	F_{SCL}	-	-	400	kHz	
SCL high time	T_{HIGH}	200	-	-	ns	
SCL low time	T_{LOW}	0.2	-	90*	µs	*Slave clock stretching
refresh time		-	-	3	ms	

Table 9: Sensors's ASIC oscillator properties

Parameter	Symbol	Min	Typ	Max	Unit	Remarks / Conditions
Frequency	F_{OSC}	54	64	76	kHz	
Temperature Dependence		−1000		1000	ppm/K	

Table 10: EEPROM Data Retention Time

Parameter	Symbol	Min	Typ	Max	Unit	Remarks / Conditions
Data Retention (≤ 85 °C)		10			years	See text
Data Retention (≤ 105 °C)		7.2			years	

Excelitas Technologies GmbH & Co. KG
Wenzel-Jaksch-Str. 31
65199 Wiesbaden Germany
Tel.: +49 (0)611 492 430

6 I²C Interface Characteristics

An I²C serial interface is provided to read out the sensors data and for read and write access of configuration and status registers and to obtain calibration data from the EEPROM.
The following chapters give detailed instructions to understand and to operate the I²C interface. For the complete I²C specifications (version 2.1) refer to: `www.i2c-bus.org`.
The SCL is a bidirectional input and output used as synchronization clock for serial communication. The SDA is a bidirectional data input and output for serial communication. The SCL and SDA outputs operate as open drain outputs only. External pull-up resistors are required. The pull-up resistor does all the work of driving the signal line high. All devices attached to the bus may only drive the SDA and SCL lines low.
The I²C interface allows connection of a master device (MD) and one or more slave devices (SD). This device can be operated as a SD only. The MD provides the clock signals and initiates the communication transfer by selecting a SD through a slave address (SA) and only the SD, which recognizes the SA should acknowledge (ACK), the rest of SDs should remain silent.
The general data transfer format is illustrated in figure 9.

Figure 9: Illustration of voltages during I²C communication

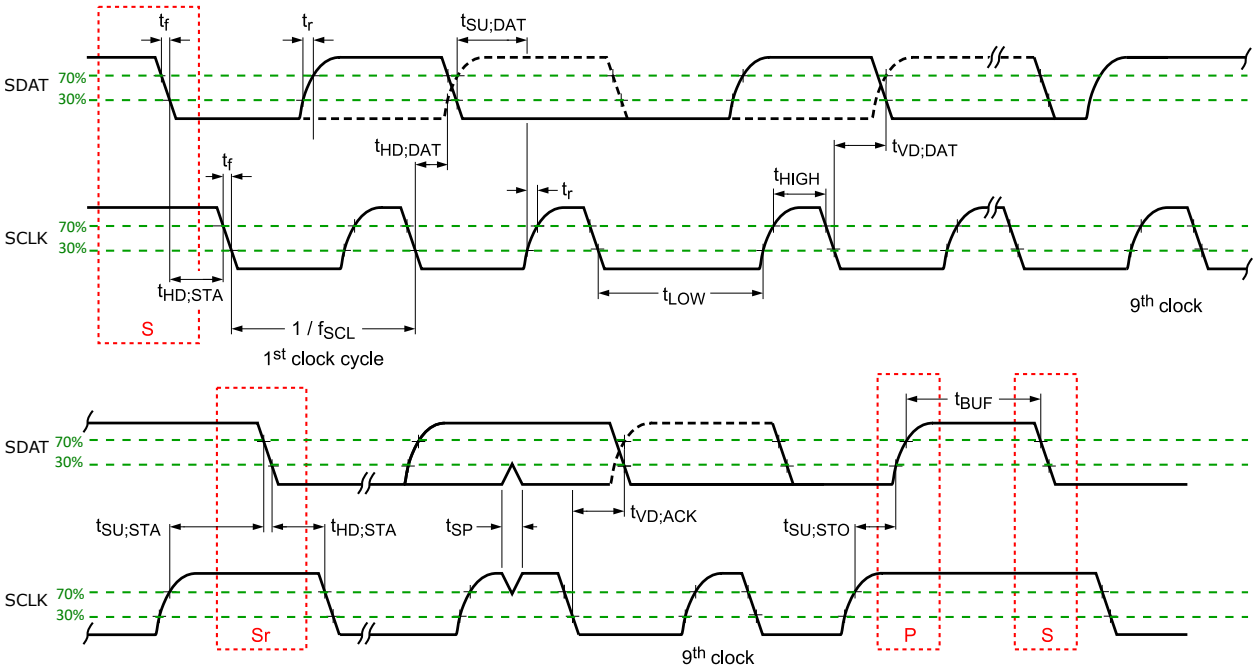

6.1 START and STOP conditions

Figure 10: START and STOP Condition

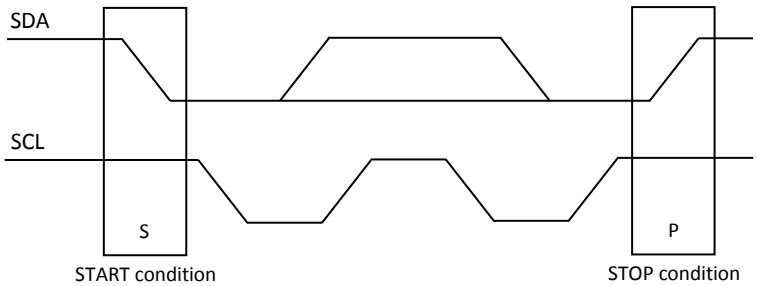

Excelitas Technologies GmbH & Co. KG
Wenzel-Jaksch-Str. 31
65199 Wiesbaden Germany
Tel.: +49 (0)611 492 430

Two unique bus situations define a message START and STOP condition which is shown in figure 10.

1. A high to low transition of the SDAT line while SCLK is high indicates a message START condition.
2. A low to high transition of the SDAT line while SCLK is high defines a message STOP condition. START and STOP conditions are always generated by the bus master. After a START condition the bus is considered to be busy. The bus becomes idle again after certain time following a STOP condition or after both the SCLK and SDAT lines remain high for more than $t_{HIGH:MAX}$.

6.2 Clock low extension

Figure 11: Clock low extension

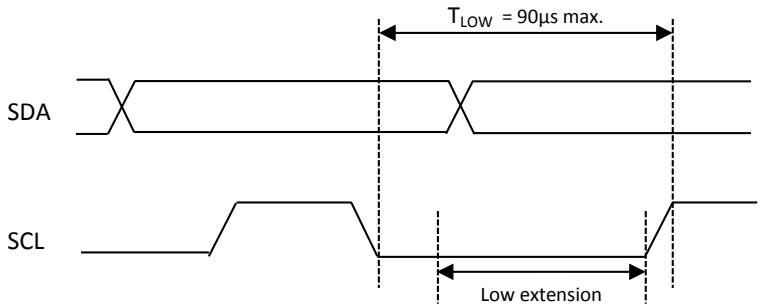

The CaliPile™may need some time to process received data or may not be ready yet to send the next byte. In this case the SD can pull the SCL clock low to extend the low period of SCL and to signal to the master that it should wait (see figure 11). Once the clock is released the master can proceed with the next byte.

6.3 Slave Address

After power up the CaliPile™responds to the General Call Address (0x00) only. Upon receipt of a general call, it loads its slave address from EEPROM (ESA<7:0>). The slave address stored in the EEPROM consists of 7 address bits (6:0) and 1 address control bit (7). If the address control bit is set, the slave address read from the EEPROM is merged with the information from the slave address select pin ADR .

Table 11: Examples for the interplay between configuration pins and the EEPROM

ESA<7:0>	<ADR > state	I^2C slave address
1000 1100	H	000 1111
0000 1100	H	000 1100
1ABC DEFG	Z	ABC DEZZ
0ABC DEFG	Z	ABC DEFG

Some examples are given in table 11. The CaliPile™in the standard configuration has enabled configuration pins. The standard EEPROM content is **1000 1100**. The standard slave address is therefore dec12 or 000 1100 in binary representation when the address input pin ADR is connected to ground.

6.4 Protocol diagram description

In the following chapters, the communication protocol will be illustrated with diagrams. Figure 12 describes the meaning of those diagrams.

Excelitas Technologies GmbH & Co. KG
Wenzel-Jaksch-Str. 31
65199 Wiesbaden Germany
Tel.: +49 (0)611 492 430

Figure 12: Protocol diagram description

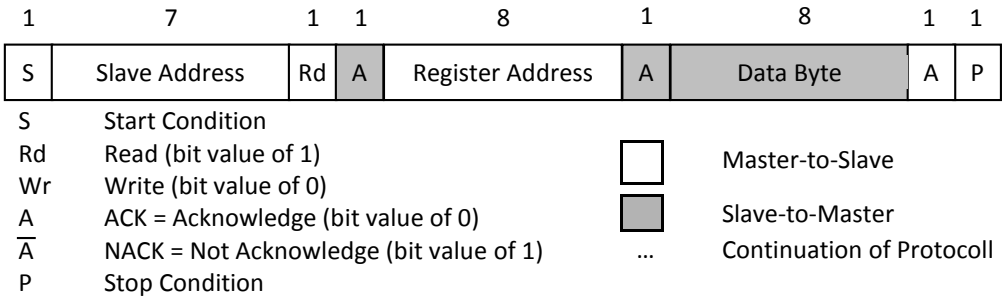

6.5 General Call

In order to re-fresh the slave address from EEPROM the MD has to send a general call (0x00) followed by the reload command (0x04). The slave may require up to 300 µs for copying the slave address from EEPROM information into the register.

Figure 13: General call format

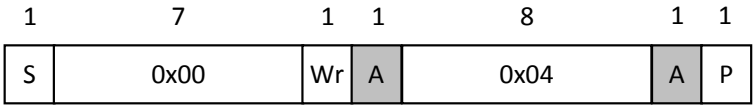

6.6 Reading Data from the Register

Each register can be read through the I^2C bus interface. The address information following Slave address points to the register to be read. The SD may require some time to load the data into the serial interface and therefore apply "clock stretching" after reception of the address byte. Once the data is ready for transmission to the MD, clock-stretching will be released and the MD can clock out the data byte.
The address pointer on the SD will be automatically incremented to prepare for the next data byte to be fetched for transmission. The SD may apply "clock stretching" again to enforce a waiting time, before the next data byte is ready for transmission. The address pointer will wrap around to 0 once it exceeds address 63.
Reading of data can be interrupted by the MD at any time by generating a stop or a new start condition or a "not acknowledge". This is illustrated in figure 14.

Figure 14: Register read format

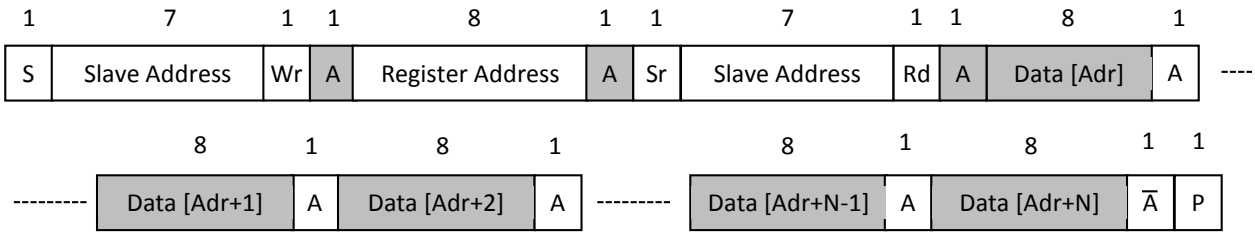

6.7 Writing Data to Register

Each register can be written to through the I^2C bus interface. The address information following the Slave address specifies the location, where the next data byte is written to. The SD may require some time to write the data into the registers on chip and therefore apply "clock stretching" after reception of the data byte. Once the data is stored

Excelitas Technologies GmbH & Co. KG
Wenzel-Jaksch-Str. 31
65199 Wiesbaden Germany
Tel.: +49 (0)611 492 430

in the register, the slave will increment the address pointer and prepare for the next data byte to be received. The address pointer will wrap around when it exceeds 63.
Writing of data can be interrupted at any time by generating a stop or a new start condition or a "not acknowledge". This is illustrated in figure 15.

Figure 15: Register write format

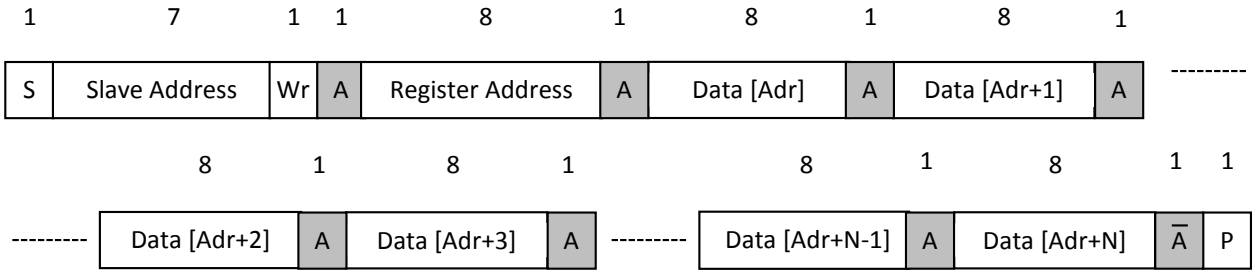

If the address points to a non-writable register, the register content remains unchanged.

6.8 Reading EEPROM

A dedicated EEPROM control register (ECR) is provided to control access mode and to allow testing of EEPROM during production. Prior to reading EEPROM memory via I2C interface the control byte needs to be set accordingly. It is of importance to configure the EEPROM control register correctly as specified to ensure correct operation. In order to enable EEPROM reading, the ECR must be set to 0x80 as depicted in figure 16.

Figure 16: Configuring register for EEPROM readout

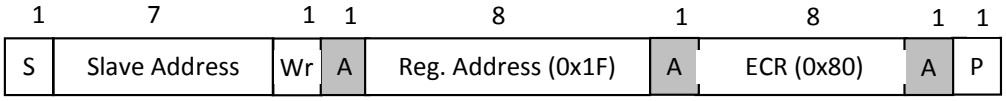

Note: Configuring the ECR for EEPROM read access causes increase of the supply current during EEPROM read operation until ECR will be set to 0x00 again.
Once the ECR has been setup correctly for read operation, the EEPROM cells can be addressed and read as drawn to figure 17.

Figure 17: Reading EEPROM

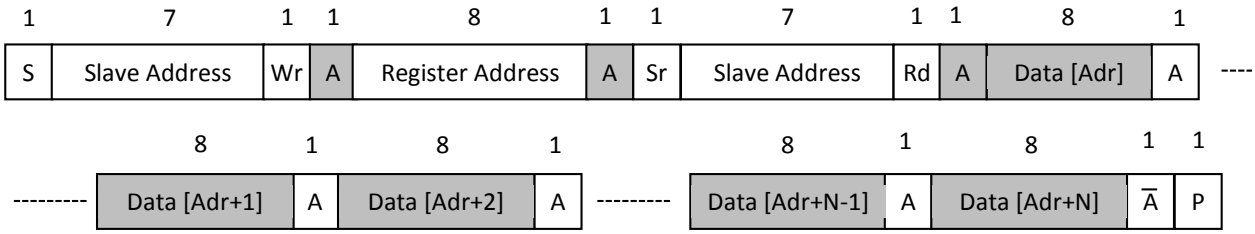

The address information following the Slave address points to the EEPROM memory location to be read. The SD may require some time to load the data into the serial interface and therefore apply "clock stretching" after reception of the address byte. Once the data is ready for transmission to the MD, clock stretching will be released and the MD can clock out the data byte.
The address pointer on the SD will be automatically incremented to prepare for the next data byte to be fetched for transmission. The SD may apply "clock stretching" again to enforce a waiting time, before the next data byte

Excelitas Technologies GmbH & Co. KG
Wenzel-Jaksch-Str. 31
65199 Wiesbaden Germany
Tel.: +49 (0)611 492 430

is ready for transmission. The address pointer will wrap around to 0 once it exceeds address 63.
The EEPROM control register must be configured to 0x00 after the end of the EEPROM read operation to bring the supply current back to normal (lower) level.

Excelitas Technologies GmbH & Co. KG
Wenzel-Jaksch-Str. 31
65199 Wiesbaden Germany
Tel.: +49 (0)611 492 430

7 Data processing characteristics

7.1 Control and Status Registers

Table 12: Register content

Register #	Description	Size[bit]	Access
0	reserved	8	-
1-2,3[7]	TP_{object}	17	Read
3[6:0],4	$TP_{ambient}$	15	Read
5-7[7:4]	TP_{ObjLP1}	20	Read
7[3:0]-9	TP_{ObjLP2}	20	Read
10-11	TP_{ambLP3}	16	Read
12-14	$TP_{ObjLP2\ frozen}$	24	Read
15	$TP_{presence}$	8	Read
16	TP_{motion}	8	Read
17	$TP_{amb\ shock}$	8	Read
18[7:0]	Interrupt Status	8	Read(Autoclear)
19[7:0]	Chip Status	8	Read
20[3:0]	S_{LP1}	4	Write/Read
20[7:4]	S_{LP2}	4	Write/Read
21[3:0]	S_{LP3}	4	Write/Read
21[7:4]	reserved	4	-
22	$TP_{presence}$ threshold	8	Write/Read
23	TP_{motion} threshold	8	Write/Read
24	$TP_{amb\ shock}$ threshold	8	Write/Read
25[4:0]	Interrupt Mask Register	5	Write/Read
25[7:5]	reserved	3	-
26[1:0]	Cycle time for Motion differentiation	2	Write/Read
26[3:2]	SRC select for presence determination	2	Write/Read
26[4]	TP_{OT} direction	1	Write/Read
26[7:5]	reserved	3	-
27[7:0]	Timer interrupt	8	Write/Read
28,29	TP_{OT} threshold	16	Write/Read
30	reserved	8	-
31	EEPROM control	8	Write/Read
62:32	EEPROM content	248	Read
63	Slave address	8	Read

The control and status registers in table 12 give access to the variables of the integrated CaliPile™ASIC. Details on the registers are given in the following section 7.2.
While some registers contain computed values other contain parameters to control the functionality of the chip which is described in section 8.
The register control values are undefined after power-up and require an initialization procedure for a well-defined operation of the CaliPile™.

Excelitas Technologies GmbH & Co. KG
Wenzel-Jaksch-Str. 31
65199 Wiesbaden Germany
Tel.: +49 (0)611 492 430

7.2 Control Register Details

TP_{object}																							
Register #1[7:0]								**Register #2[7:0]**								**Register #3[7]**							
7	6	5	4	3	2	1	0	7	6	5	4	3	2	1	0	7	-	-	-	-	-	-	-

Contains the 17 bit TP_{object} raw ADC value in digits. This represents the current signal of the thermopile sensor element.

$TP_{ambient}$															
Register #3[6:0]								**Register #4[7:0]**							
-	6	5	4	3	2	1	0	7	6	5	4	3	2	1	0

Contains the 15 bit $TP_{ambient}$ raw value in digits. This represents the current signal of the ambient temperature sensor (PTAT).

$TP_{objectLP1}$																							
Register #5[7:0]								**Register #6[7:0]**								**Register #7[7:4]**							
7	6	5	4	3	2	1	0	7	6	5	4	3	2	1	0	7	6	5	4	-	-	-	-

Contains the 20 bit TP_{objLP1} value in digits. This represents the low-pass-filtered value of the TP_{object} signal. To compare it with the 17 bit wide TP_{object} divide the value by $2^3 = 8$. The filter time constant for this filter stage can be set with S_{LP1}.

$TP_{objectLP2}$																							
Register #7[3:0]								**Register #8[7:0]**								**Register #9[7:0]**							
-	-	-	-	3	2	1	0	7	6	5	4	3	2	1	0	7	6	5	4	3	2	1	0

Contains the 20 bit TP_{objLP2} value in digits. This represents the low-pass-filtered value of the TP_{object} signal. To compare it with the 17 bit wide TP_{object} divide the value by $2^3 = 8$. The filter time constant for this filter stage can be set with S_{LP2}.

TP_{ambLP3}															
Register #10[7:0]								**Register #11[7:0]**							
7	6	5	4	3	2	1	0	7	6	5	4	3	2	1	0

Contains the 16 bit TP_{ambLP3} value in digits. This represents the low-pass-filtered value of the $TP_{ambient}$ signal. To compare it with the 15 bit wide $TP_{ambient}$ divide the value by $2^1 = 2$. The filter time constant for this filter stage can be set with S_{LP3}.

$TP_{objectLP2\ frozen}$																							
Register #12[7:0]								**Register #13[7:0]**								**Register #14[7:0]**							
7	6	5	4	3	2	1	0	7	6	5	4	3	2	1	0	7	6	5	4	3	2	1	0

Contains the 24 bit $TP_{objLP2\ frozen}$ value in digits. This represents the low-pass-filtered value of the TP_{object} signal when motion was detected. To compare it with the 17 bit wide TP_{object} divide the value by $2^7 = 128$. See section 8.3 for more details on the motion detection algorithm.

Excelitas Technologies GmbH & Co. KG
Wenzel-Jaksch-Str. 31
65199 Wiesbaden Germany
Tel.: +49 (0)611 492 430

$TP_{presence}$							
Register #15[7:0]							
7	6	5	4	3	2	1	0

Contains the 8 bit $TP_{presence}$ value in digits. It is the unsigned difference between two values which combination is steered with the "source select". The sign of the value is contained in the "chip status". See section 8.2 for details.

TP_{motion}							
Register #16[7:0]							
7	6	5	4	3	2	1	0

Contains the 8 bit TP_{motion} value in digits. It is the unsigned difference between two consecutive values of $TP_{objectLP1}$. The sign of the value is contained in the "chip status". The interval is steered with the "cycle time". See section 8.3 for details.

$TP_{amb\ shock}$							
Register #17[7:0]							
7	6	5	4	3	2	1	0

Contains the 8 bit $TP_{amb\ shock}$ value in digits. It is the unsigned difference between $TP_{ambient}$ and TP_{ambL1}. The sign of the value is contained in the "chip status". See section 8.4 for details.

Interrupt status							
Register #18[7:5] sign			**Register #18[4:0] flag**				
7	6	5	4	3	2	1	0
$TP_{presence}$	TP_{motion}	$TP_{amb\ shock}$	TP_{OT}	$TP_{presence}$	TP_{motion}	$TP_{amb\ shock}$	timer

Each fulfilled interrupt condition between the last readout and the current one is stored here. See also "Chip status" for the current status of the interrupt conditions. Reading this register clears the register (setting it to 0x00) and resets the physical interrupt output (release to high).
Sign is the sign bit to the corresponding unsigned 8 bit values when the interrupt condition of the corresponding interrupt calculation branches (see section 8) was fulfilled since the last readout of that register. A 0 represents a positive value and a 1 a negative value.
Flag Contains a 1 when a condition of the corresponding interrupt calculation branches was fulfilled since the last readout of that register.
Timer Contains a 1 when at least one period of the timer passed since the last readout of that register.

Chip status							
Register #19[7:5] sign			**Register #19[4:0] flag**				
7	6	5	4	3	2	1	0
$TP_{presence}$	TP_{motion}	$TP_{amb\ shock}$	TP_{OT}	$TP_{presence}$	TP_{motion}	$TP_{amb\ shock}$	timer

Sign is the sign bit to the corresponding unsigned 8 bit values. A 0 represents a positive value and a 1 a negative value.
Flag represents the status of the corresponding interrupt calculation branches (see section 8). A 1 represents a full-filled condition for the interrupt.
Timer represents a flag toggling with the double frequency of the "timer interrupt".
This register is masked by the "Interrupt Mask" register to evaluate the condition for the physical interrupt output pin at the CaliPile™.

Excelitas Technologies GmbH & Co. KG
Wenzel-Jaksch-Str. 31
65199 Wiesbaden Germany
Tel.: +49 (0)611 492 430

Low pass time constants S_{LP}							
Register #20[7:4] LP2				**Register #20[3:0] LP1**			
7	6	5	4	3	2	1	0
reserved				**Register #21[3:0] LP3**			
-	-	-	-	3	2	1	0

Contains the time constants for the three low-pass filters LP1, LP2 and LP3 (see section 8). The possible settings and the corresponding values are denoted in table 25.

Table 25: Low pass settings for LP1, LP2 and LP3. Typical numbers which depend on the internal oscillator frequency as specified in table 9.

$f_{\text{cut off}}$[Hz]	$1/(2\pi f)$[s]	**select code [hex]**	**select code [bin]**
6.4×10^{-1}	0.25	D	1101
3.2×10^{-1}	0.50	C	1100
1.5×10^{-1}	1	B	1011
7.9×10^{-2}	2	A	1010
3.9×10^{-2}	4	9	1001
1.9×10^{-2}	8	8	1000
9.9×10^{-3}	16	5	0101
4.9×10^{-3}	32	4	0100
2.5×10^{-3}	64	3	0011
1.2×10^{-3}	128	2	0010
6.2×10^{-4}	256	1	0001
3.1×10^{-4}	512	0	0000

$TP_{presence}$ threshold							
Register #22[7:0]							
7	6	5	4	3	2	1	0

Contains the unsigned 8 bit threshold value for $TP_{presence}$ in digits. Once the $TP_{presence}$ signal exceeds this threshold the corresponding presence flag will be set in the "chip status" register. See section 8.2 for details.

TP_{motion} threshold							
Register #23[7:0]							
7	6	5	4	3	2	1	0

Contains the unsigned 8 bit threshold value for TP_{motion} in digits. Once the TP_{motion} signal exceeds this threshold the corresponding presence flag will be set in the "chip status" register. See section 8.3 for details.

$TP_{amb\ shock}$ threshold							
Register #24[7:0]							
7	6	5	4	3	2	1	0

Contains the unsigned 8 bit threshold value for $TP_{amb\ shock}$ in digits. Once the $TP_{amb\ shock}$ signal exceeds this threshold the corresponding presence flag will be set in the "chip status" register. See section 8.4 for details.

Excelitas Technologies GmbH & Co. KG
Wenzel-Jaksch-Str. 31
65199 Wiesbaden Germany
Tel.: +49 (0)611 492 430

Interrupt Mask							
reserved			**Register #25[4:0]**				
-	-	-	4	3	2	1	0
-	-	-	TP_{OT}	$TP_{presence}$	TP_{motion}	$TP_{amb\ shock}$	timer

Contains the 5 bit mask value to activate the external interrupt output INT pin based on five different possible sources in the "chip status" register.
The INT pin will be activated only if the corresponding mask flag inside the interrupt mask register is set to 1 and the corresponding interrupt occurs as signaled in the "chip status" register.
Bit[4]: set to 1 activates the INT pin if the TP_{OT} flag in register "chip status" has been set
Bit[3]: set to 1 activates the INT pin if the $TP_{presence}$ flag in register "chip status" has been set
Bit[2]: set to 1 activates the INT pin if the TP_{motion} flag in register "chip status" has been set
Bit[1]: set to 1 activates the INT pin if the $TP_{amb\ shock}$ flag in register "chip status" has been set
Bit[0]: set to 1 activates the INT pin if the timer flag in register "chip status" has been set
If more than one mask bit has been set the INT pin will be activated for whatever flag in the chip status register comes first (OR condition). The INT output will remain active until the host micro-controller reads the "interrupt status" register. Interrupts are set when conditions change from inactive (0) to active (1).

Multiple							
Register #26							
reserved			**TP_{OT} dir**	**[3:2] SRC select**		**[1:0] cycle time**	
-	-	-	4	3	2	1	0

TP_{OT} dir allows to select in which direction TP_{object} has to cross the TP_{OT} threshold to create an interrupt.
If 1, an interrupt is created if TP_{object} exceeds the TP_{OT} threshold.
If 0, an interrupt is created if TP_{object} falls below the TP_{OT} threshold.
SRC select allows to switch the signal sources to be used for the $TP_{presence}$ calculation as explained further in section 8.2. Possible values are

$$
\begin{aligned}
00 &= TP_{object} - TP_{objLP2} \\
01 &= TP_{objLP1} - TP_{objLP2} \\
10 &= TP_{object} - TP_{objLP2\ frozen} \\
11 &= TP_{objLP1} - TP_{objLP2\ frozen}
\end{aligned}
$$

Cycle time is the time between these two consecutive TP_{objLP1} points to determine TP_{motion}. This is explained further in section 8.3. Possible values are

$$
\begin{aligned}
00 &= 30\ \text{ms} \\
01 &= 60\ \text{ms} \\
10 &= 120\ \text{ms} \\
11 &= 240\ \text{ms}
\end{aligned}
$$

Those are typical numbers which depend on the internal oscillator frequency as specified in table 9.

Excelitas Technologies GmbH & Co. KG
Wenzel-Jaksch-Str. 31
65199 Wiesbaden Germany
Tel.: +49 (0)611 492 430

Timer interrupt							
Register #27[7:0]							
7	6	5	4	3	2	1	0

Contains a timer overrun value from 30 ms up to 7.7 s in steps of 30 ms.

$$\text{Timer interval} = (1 + \text{Timer interrupt}) \cdot 30\,\text{ms}$$

Those are typical numbers which depend on the internal oscillator frequency as specified in table 9.

TP_{OT} threshold															
Register #28[7:0]								**Register #29[7:0]**							
7	6	5	4	3	2	1	0	7	6	5	4	3	2	1	0

Contains the 16 bit TP_{OT} threshold value in digits. To compare this value to the 17 bit wide TP_{object} please multiply this value by a factor of $2^1 = 2$. More details are depicted in section 8.5.

EEPROM control register							
Register #31[7:0]							
7	6	5	4	3	2	1	0

Contains the EEPROM control bits. Set it to 0x80 in order to read the EEPROM through the register. **It should be set to 0x00 in case of no access to the EEPROM.** For more details please refer to section 6.8.

Excelitas Technologies GmbH & Co. KG
Wenzel-Jaksch-Str. 31
65199 Wiesbaden Germany
Tel.: +49 (0)611 492 430

8 Internal processing overview

In order to explore the complex functionalities of our CaliPile™products, we recommend to obtain one of our Demonstration Kits. Please ask our local representative for further advice.

Figure 18: A schematic overview on the internal processing paths and variables

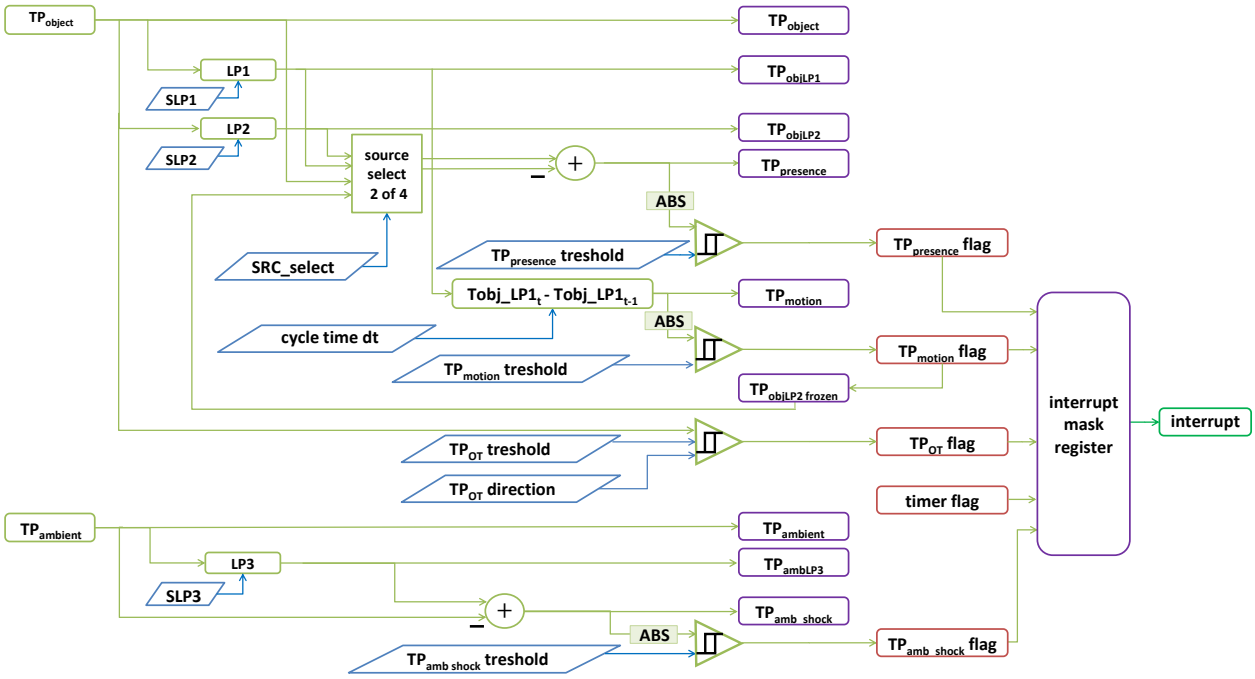

The Sketch 18 gives an overview on the internal CaliPile™data processing algorithms. The CaliPile™contains all functions required to allow an external micro-controller to detect activity and presence. The parameters which should lead for example to a wake-up of the host micro-controller can be programmed and adapted on the fly. The algorithm is based on various filter calculations of the sensor signals TP_{object} and $TP_{ambient}$, their differences and time derivatives.

The CaliPile™offers 4 basic functions which are "presence detection", "motion detection", "ambient temperature shock detection" and "over temperature detection". Those functions can be selected by the host micro-controller as an interrupt source for wakeup. The parameters used to calculate the current state of "presence", "motion" or "shock" can be changed by the host controller through control registers. This allows the host controller to stay in sleep mode for most of the time and only be activated once the CaliPile™detects a change which requires intervention.

8.1 Object and Ambient Temperatures

TP_{object} and $TP_{ambient}$ are the ADC raw data from the thermopile and the internal temperature reference PTAT. To calculate the actual object temperature and ambient temperature a calculation is required on the host system based on the calibration constants from the CaliPile™'s EEPROM. Details are described in section 9. All other functionalities of the chip do not require an explicit knowledge of the actual temperatures as only relative changes are being processed. This allows a continuous operation of the CaliPile™at a low power power consumption.

8.2 Presence Detection

Presence detection is accomplished by observing the difference between two user selectable signal paths which will be calculated from the thermopile raw signal TP_{object} (see chart 19). In order to select the optimal application

Excelitas Technologies GmbH & Co. KG
Wenzel-Jaksch-Str. 31
65199 Wiesbaden Germany
Tel.: +49 (0)611 492 430

Figure 19: Presence detection algorithm chart

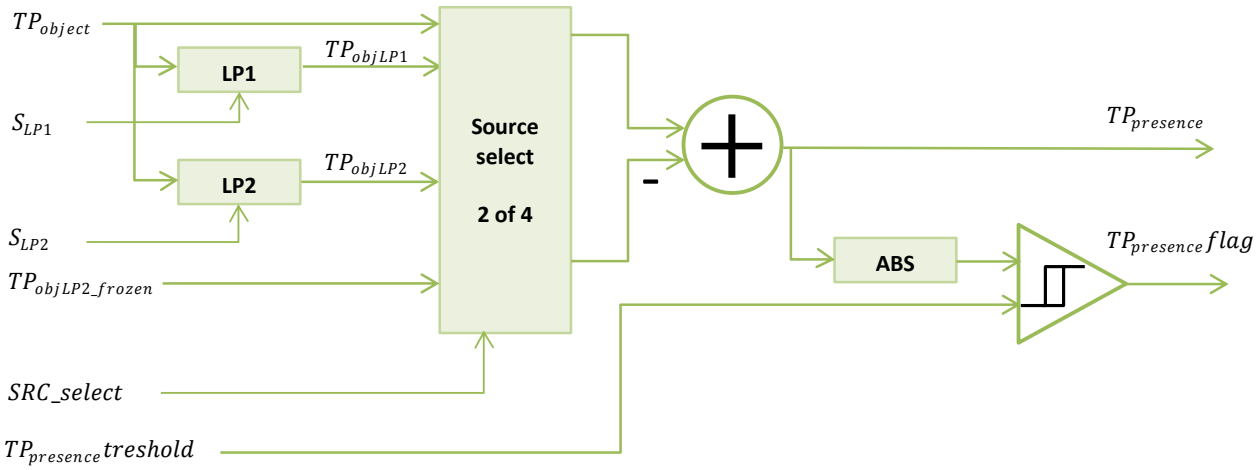

specific solution for presence detection, four signal path combinations are available for selection.
The original TP_{object} data as provided by the thermopile, two signals, which have been processed by low pass filters LP1 and LP2 with different user programmable time constants (S_{LP1} ,S_{LP2}).

$$TP_{objLP1}(x) = TP_{object}(x) \cdot S_{LP1} + TP_{objLP1}(x-1) \cdot (1 - S_{LP1})$$
$$TP_{objLP2}(x) = TP_{object}(x) \cdot S_{LP2} + TP_{objLP2}(x-1) \cdot (1 - S_{LP2})$$

The signal $TP_{ObjLP2\ frozen}$ which is the TP_{ObjLP2} output, that was saved at the moment the last motion event was detected.
Thus various calculations for presence detection are possible and can be adapted to the actual conditions e.g.:

$$TP_{presence} = TP_{object} - TP_{objLP2}$$
$$TP_{presence} = TP_{objLP1} - TP_{objLP2}$$
$$TP_{presence} = TP_{object} - TP_{objLP2\ frozen}$$
$$TP_{presence} = TP_{objLP1} - TP_{objLP2\ frozen}$$

The difference of those two selected signals paths is then compared with a programmable threshold $TP_{presence\ threshold}$.
The $TP_{presence}$ flag is set once the difference of the two signals exceeds the threshold.
Recommended settings to start the evaluation with are:

variable	value	meaning
S_{LP1}	bin 1011	1 s
S_{LP2}	bin 1000	8 s
SRC select	bin 01	$TP_{objLP1} - TP_{objLP2}$
$TP_{presence}$ threshold	dec 10	±10 counts
Interrupt Mask	bin 0000 1000	$TP_{presence}$

Other register values are not important for that parameter set.

Excelitas Technologies GmbH & Co. KG
Wenzel-Jaksch-Str. 31
65199 Wiesbaden Germany
Tel.: +49 (0)611 492 430

8.3 Motion detection

Figure 20: Motion detection algorithm chart

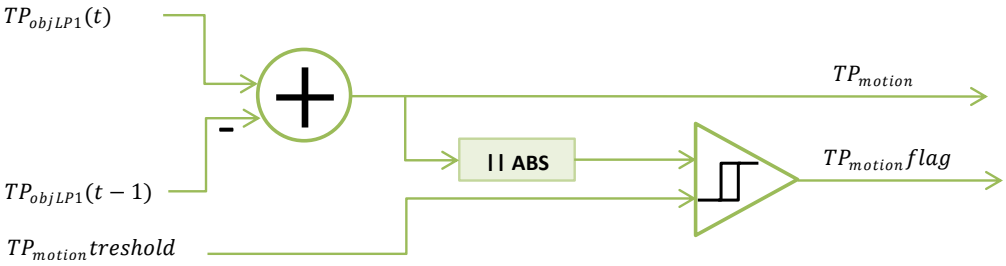

Motion detection is accomplished by observing the difference between two consecutive samples of TP_{objLP1} with a programmable time interval dt. This is comparable to the 1st derivative of TP_{objLP1}.

$$TP_{motion} = \frac{dTP_{objLP1}}{dt}$$

The difference of the two signals paths is then compared with a programmable threshold $TP_{motion\ threshold}$. The TP_{motion} flag is set once the difference exceeds the threshold. This is illustrated in figure 20.
At the moment the TP_{motion} flag is set, the current value of TP_{objLP2} will be saved as $TP_{objLP2\ frozen}$ for further use in the presence detection algorithm.
Recommended settings to start the evaluation with are:

variable	value	meaning
S_{LP1}	bin 1100	0.5 s
cycle time	bin 10	120 ms
TP_{motion} threshold	dec 10	±10 counts
Interrupt Mask	bin 0000 0100	TP_{motion}

Other register values are not important for that parameter set.
It should be noticed that motion detection requires a fast change in the signal. It is thus suitable for small field-of-views in case of large distances to the sensor. To reduce the field-of-view of a sensor apply lens or aperture optics.

8.4 Ambient temperature shock detection

Figure 21: Ambient Temperature shock detection algorithm chart

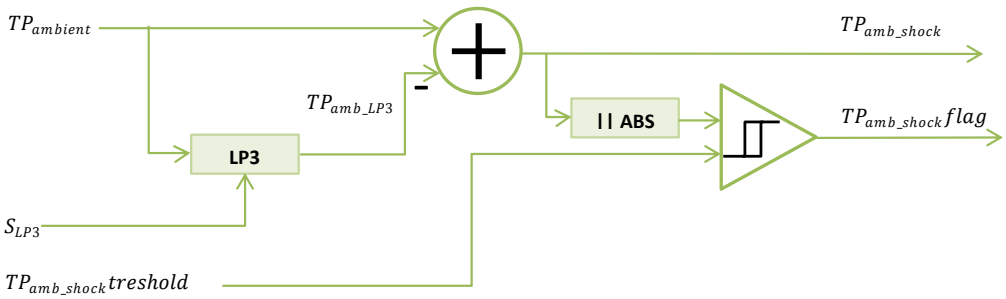

As shown in figure 21 the ambient temperature shock detection is accomplished by observing the difference between $TP_{ambient}$ and the low pass filtered $TP_{amb\ LP3}$. The difference of the two signals will then compared with a

Excelitas Technologies GmbH & Co. KG
Wenzel-Jaksch-Str. 31
65199 Wiesbaden Germany
Tel.: +49 (0)611 492 430

programmable threshold $TP_{amb\ shock}$ threshold. The $TP_{amb\ shock}$ flag is set once the difference exceeds the threshold to indicate a sudden change in the ambient temperature.
Recommended settings to start the evaluation with are:

variable	value	meaning
S_{LP3}	bin 1010	2 s
$TP_{amb\ shock}$ threshold	dec 10	±10 counts
Interrupt Mask	bin 0000 0010	$TP_{amb\ shock}$

Other register values are not important for that parameter set.

8.5 Object temperature over or under limit detection

Figure 22: Object temperature over or under limit detection algorithm chart

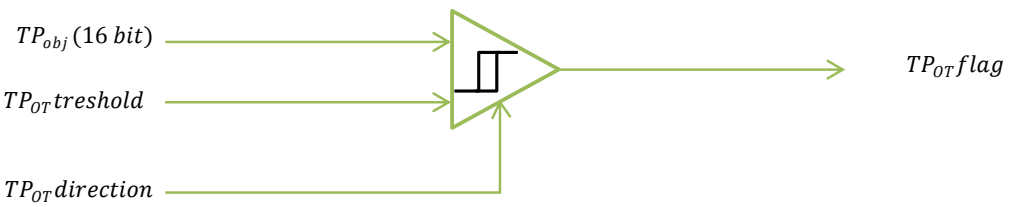

The TP_{object} raw data is compared against the value specified in the object temperature threshold TP_{OT}threshold. This is illustrated in figure 22. An event is generated whenever the object temperature crosses the threshold. The user can select by the use of the corresponding control registers, the condition which should lead to an interrupt: Exceeding the limit or falling below the limit.
The interrupt is cleared when the micro-controller reads the interrupt status register. A new interrupt can only be generated with a new event (object temperature crosses the threshold).
To ensure correct system start up, the over temperature flag is set and the interrupt output is switched active after the device has been powered up. This feature is achieved with an on chip power on reset.
Note that TP_{object} is the thermopile raw value which does not necessarily correspond to one fixed object temperature. This is specially the case when the ambient temperature changes. See also figure 7 for an illustration. To determine TP_{object} and/or a threshold for a given object temperature, refer to section 9.

8.6 Hysteresis

The calculations for $TP_{presence}$ TP_{motion} and $TP_{amb\ shock}$ apply a hysteresis of 12.5 % of the actual threshold value. The minimum hysteresis value is fixed to 5 counts. That means that the actual value must fall below the threshold by 12.5 % of the threshold or at least by 5 counts in order to change the corresponding "chip status" bit to 0.
For the object temperature over/under limit detection TP_{OT} threshold there is a fixed hysteresis of 64 counts built into the threshold comparator. This is large enough to suppress the noise on the signals and to prevent false or frequent triggering of the corresponding flags if the signal is close to the threshold. It may lead to confusion when for example extremely small amplitudes are being evaluated which in turn require small thresholds.

Excelitas Technologies GmbH & Co. KG
Wenzel-Jaksch-Str. 31
65199 Wiesbaden Germany
Tel.: +49 (0)611 492 430

9 Temperature Measurement

9.1 Calibration Conditions

The thermopile output is related to the net IR-radiation. The net IR-radiation can be correlated with the object temperature for a specific fixed set-up. The set-up valid for the factory calibration constants is shown in sketch 23.

Figure 23: Measurement conditions

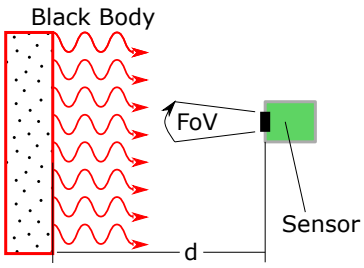

A fluid heated plane black body with an outer dimension covering at least 4 times the sensors field-of-view (FoV) and an emissivity of better than 95 % has a surface temperature T_{obj} of 40 °C. The surface temperature uniformity is better than 0.2 °C. The ambient temperature T_{amb} is at (25 ± 3) °C. The TPiS 1C 0987 sensor is mounted at a distance d of 17 mm to the black body. The sensor's temperature may differ from the controlled ambient temperature due to the BB's heat.
Conditions other than described in this document generally require a customized object calibration. Otherwise sensor performance may be different than specified here. Please contact our local representative for more details.

9.2 EEPROM content

Table 37: EEPROM content

Register#	EEPROM#	Name	Description	Content Example
32	0	PROTOCOL	EEPROM Protocol number	3
33,34	1,2	CHKSUM	Checksum of all EEPROM contents excluding cell 1,2	-
35	3	BAU#	Last 2 digits of Excelitas BAU number	56
36,37	4,5	Initialization Date	Date of first sensor initialization	-
38 .. 40	6 .. 8	Sensor ID	ID, unique to the initialization date	-
41	9	LOOKUP#	Identifier for look-up-table	42
42,43	10,11	PTAT25	Tamb output in digits at 25 °C	13 500
44,45	12,13	M	PTAT slope [digits/K]×100	17 200
46,47	14,15	U_0	TP offset, $U_0 - 32768$	31 732
48,49	16,17	U_{OUT1}	TP output for T_{OBJ1} at 25 °C, $U_{out}/2$	38 990
50	18	T_{OBJ1}	T_{OBJ} value in °C for U_{OUT1}	250
51 .. 62	19 .. 30	reserved	reserved	-
63	31	SLAVE ADD	I^2C slave address with external addressing bit	140

Excelitas Technologies GmbH & Co. KG
Wenzel-Jaksch-Str. 31
65199 Wiesbaden Germany
Tel.: +49 (0)611 492 430

9.3 EEPROM Details

PROTOCOL							
Register #32[7:0]							
7	6	5	4	3	2	1	0

Contains the 8 bit EEPROM Protocol number as an unique identifier. The default protocol number is 3.

CHKSUM															
Register #33[7:0]								Register #34[7:0]							
7	6	5	4	3	2	1	0	7	6	5	4	3	2	1	0

Contains the 16 bit checksum in digits. The checksum is computed as a sum of all EEPROM cells excluding the checksum cells themselves (cell# 1,2).
An implementation of the sum check might look like:

```
bool check_checksum()
{
    unsigned int checksum = 0; // 16 bit
    unsigned int sum = 0; // 16 bit
    unsigned char ieeprom = 0;
    unsigned char value = 0; // 8 bit
    for (ieeprom = 0; ieeprom < 32; ieeprom++)
    {
        value = GetEEPROM(ieeprom); // obtain 8 bit value from eeprom
        if (ieeprom == 1)
        {
            checksum = value;
            checksum <<= 8;
        }
        else
        {
            if (ieeprom == 2)
            {
                checksum |= value;
            }
            else
            {
                sum += value;
            }
        }
    }
    if (sum == checksum)
        return true;
    else
        return false;
}
```

BAU#
Register #35[7:0]

Excelitas Technologies GmbH & Co. KG
Wenzel-Jaksch-Str. 31
65199 Wiesbaden Germany
Tel.: +49 (0)611 492 430

7	6	5	4	3	2	1	0

Contains the last two digits of the Excelitas BAU number for this specific sensor type. The value ranges from 00 to 99.

Initialization Date															
Register #36[6:0]								Register #37[7:0]							
7	6	5	4	3	2	1	0	7	6	5	4	3	2	1	0
year - 2015				month				reserved				day			

Contains the date of sensor initialization. Needed to identify with sensor uniquely together with the Sensor ID.

Sensor ID		
Register #38[7:0]	**Register #39[7:0]**	**Register #40[7:0]**

Sensor identification number, which is unique at the date of initialization.
An implementation of unique ID generator might look like:

```
string Get_ID()
{
unsigned int _sensorID = GetEEPROM(6); // 24 bits needed
_sensorID <<= 8;
_sensorID |= GetEEPROM(7);
_sensorID <<= 8;
_sensorID |= (int) GetEEPROM(8);
// ToString("Dx") returns an integer as a string, which is x digits long
if (_sensorID > 0 && _sensorID != 0xFFFFFF)
        return "BAUNr.XX"+GetEEPROM(3).ToString("D2")+ "_"
                + (GetEEPROM(5) & 0x1F).ToString("D2") +"."
                + (GetEEPROM(4) & 0x0F).ToString("D2") + "."
                + (2015+(int)((GetEEPROM(4) & 0xF0) >> 4)).ToString("D4") + "_ID."
                + _sensorID.ToString("D7");
else
        return "";
}
```

LOOKUP#							
Register #41[7:0]							
7	6	5	4	3	2	1	0

Contains the 8 bit look-up-table identifier which defines the functional behaviour of that specific device. The default value for that product type is 42. For details please refer to section 9.5.

PTAT25															
Register #42[6:0]								Register #43[7:0]							
-	6	5	4	3	2	1	0	7	6	5	4	3	2	1	0

Contains the 15 bit $TP_{ambient}$ value of the internal PTAT in digits at an ambient temperature of 25 °C. The first bit is unused and always 0. A typical value is 13 500 counts. For details please refer to section 9.4.

Excelitas Technologies GmbH & Co. KG
Wenzel-Jaksch-Str. 31
65199 Wiesbaden Germany
Tel.: +49 (0)611 492 430

M															
Register #44[7:0]								**Register #45[7:0]**							
7	6	5	4	3	2	1	0	7	6	5	4	3	2	1	0

Contains the 16 bit slope value of the internal PTAT in digits per Kelvin scaled by a factor of 100.

$$M = \text{RegVal}/100$$

A typical slope is 172 counts/K. For details please refer to section 9.4.

U_0															
Register #46[7:0]								**Register #47[7:0]**							
7	6	5	4	3	2	1	0	7	6	5	4	3	2	1	0

Contains the 16 bit TP_{object} offset value of the thermopile subtracted by 32 768 counts.

$$U_0 = \text{RegVal} + 32768$$

A typical offset is 64 500 counts. For details please refer to section 9.5.

Excelitas Technologies GmbH & Co. KG
Wenzel-Jaksch-Str. 31
65199 Wiesbaden Germany
Tel.: +49 (0)611 492 430

U_{OUT1}															
Register #48[7:0]								**Register #49[7:0]**							
7	6	5	4	3	2	1	0	7	6	5	4	3	2	1	0

Contains the 16 bit TP_{object} value of the thermopile divided by a factor of 2 when facing a black body with a temperature of T_{OBJ1} at an ambient temperature of 25 °C.

$$U_{OUT1} = \text{RegVal} \cdot 2$$

A typical value is 77980 counts. For details please refer to section 9.5.

T_{OBJ1}							
Register #50[7:0]							
7	6	5	4	3	2	1	0

Contains the 8 bit value in °C for the black body giving the response of U_{OUT1}. A typical value is 250°C. For details please refer to section 9.5.

SLAVE ADD							
Register #63							
[7]	**[6:0]**						
7	6	5	4	3	2	1	0
ADD PIN	I^2C base address						

Contains the 7 bit I^2C base address which is completed by the A0,A1 external pin settings when ADD PIN is set to 1. For details please refer to section 6.3.

Excelitas Technologies GmbH & Co. KG
Wenzel-Jaksch-Str. 31
65199 Wiesbaden Germany
Tel.: +49 (0)611 492 430

9.4 Calculation of the Ambient Temprature

For a correct object temperature calculation the ambient temperature must be known. The temperature should be calculated in Kelvin and not °C. To calculate the ambient temperature out of $TP_{ambient}$ the following formula can be applied.

$$T_{amb}[K] = (25 + 273.15) + (TP_{ambient} - PTAT25) \cdot (1/M)$$

using the calibration constants PTAT25 and M from the EEPROM.
The inverse to calculate an expected PTAT value for a given temperature T_{amb} is given by

$$TP_{ambient}[counts] = [T_{amb} - (25 + 273.15)] \cdot M + PTAT25$$

9.5 Calculation of the Object Temperature

The thermopile output signal TP_{object} is not only depending on the objects temperature but also on the ambient temperature T_{amb} as demonstrated in figure 7. To obtain the object temperature T_{obj} calculate

$$T_{object}[K] = F\left[\frac{TP_{object} - U_0}{k} + f(T_{amb})\right]$$

where T_{amb} is obtained as discussed in section 9.4. k is a scaling/calibration factor given by

$$k = \frac{U_{out1} - U_0}{f(T_{obj1}[°C] + 273.15) - f(25 + 273.15)}$$

and contains the emissivity ϵ of the object as well as the field-of-view coverage factor Θ. Since our devices are calibrated for a full FOV coverage ($\Theta = 1$) and an object emissivity of nearly $\epsilon = 1$, this factor has to be scaled properly to adjust for a different object property in the application by

$$k \longmapsto k \cdot (\epsilon \cdot \Theta)$$

with ϵ and Θ in the range of 0 to 1. $f(x)$ is in the simplest case an exponential with the exponent defined by the identifier LOOKUP#.

$$f(x) = x^{4.2} \text{ if LOOKUP\# } = 42$$

It's reverse function $F(x)$ is then

$$F(x) = \sqrt[4.2]{x} \text{ if LOOKUP\# } = 42$$

Moreover U_0, U_{out1} and T_{obj1} are calibration parameters from the EEPROM.
To predict a thermopile output based on the object temperature T_{obj} and ambient temperature T_{amb} calculate

$$TP_{object}[counts] = k \cdot \left[f(T_{obj}[°C] + 273.15) - f(T_{amb}[°C] + 273.15)\right] + U_0$$

Since exponents and roots are heavy operations to be performed on a micro-controller based system, we recommend to implement $f(x)$ as a lookup table. An implementation in Object-C language can be provided upon request. You may contact our local representative for more details.

9.6 High Accuracy Temperature Measurement

In order to achieve the specified accuracy, an additional temperature compensation through a look-up algorithm is recommended. Please request the corresponding technical note and contact the technical support team for application specific support.

Excelitas Technologies GmbH & Co. KG
Wenzel-Jaksch-Str. 31
65199 Wiesbaden Germany
Tel.: +49 (0)611 492 430

9.7 NETD Dependence on Filter Settings

Figure 24: Sensor's NETD as a function of filter setting

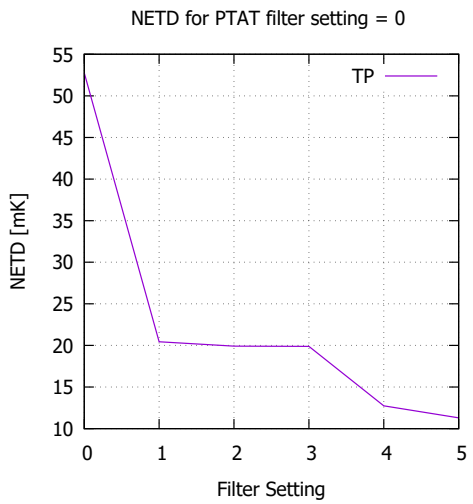

The sensor's NETD depends on the LP1, LP2, LP3 filter settings of the sensor. The settings as listed in table 25 are referenced here as natural numbers (not the select code). 0 represents the unfiltered data (TP_{object}, $TP_{ambient}$). Higher numbers represent the increasing filter settings for $TP_{object\ LP1\ /\ LP2}$, $TP_{ambient\ LP3}$. Figure 24 is a typical measurement in thermal equilibrium. The sensor's NETD improves with increasing object temperatures.

Excelitas Technologies GmbH & Co. KG
Wenzel-Jaksch-Str. 31
65199 Wiesbaden Germany
Tel.: +49 (0)611 492 430

10 Integration instructions and recommendations

10.1 PCB layout and Wiring Patterns

In general, the wiring must be chosen such that crosstalk and interference to/from the bus lines is minimized. The bus lines are most susceptible to crosstalk and interference at the high levels because of the relatively high impedance of the pull-up devices.
If the length of the bus line on a PCB or ribbon cable exceeds 5 cm and includes the VDD and VSS lines, the wiring pattern must be:
SDA - VDD - VSS - SCL
and only if the VSS line is included we recommend
SDA - VSS - SCL
as a pattern. These wiring patterns also result in identical capacitive loads for the SDA and SCL lines. The VSS and VDD lines can be omitted if a PCB with a VSS and/or VDD layer is used.
If the bus lines are twisted-pairs, each bus line must be twisted with a VSS return. Alternatively, the SCL line can be twisted with a VSS return, and the SDA line twisted with a VDD return. In the latter case, capacitors must be used to decouple the VDD line to the VSS line at both ends of the twisted pairs.
If the bus lines are shielded (shield connected to VSS), interference will be minimized. However, the shielded cable must have low capacitive coupling between the SDA and SCL lines to minimize crosstalk.
The PCB design requires, an optimization procedure to achieve the best signal quality. As a starting point sketch 25 is given. Values for pull-up resistors must be replaced by matching ones, fitting the capacitive load of lines. In case of strong EMI observations additional RC-filtering components might be required at the sensor inputs and outputs which is not depicted in the sketch.

Figure 25: Exemplary wiring layout

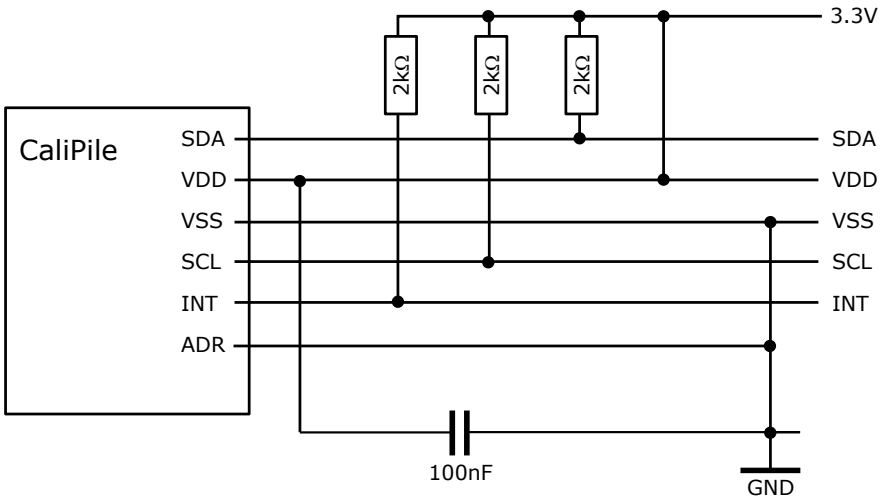

10.2 Power Supply Stability

The TPiS 1C 0987 has an excellent power supply rejection ratio (PSRR) of over 100 dB. However, voltage changes will lead to varying thermal loads and thus the PTAT reading will be affected. Typically, a voltage increase of 10 % at 3.3 V will lead to a temperature increase of about 0.06 °C. For highest temperature accuracy requirements a low drop out (LDO) regulator is advised.

10.3 Position

In order to obtain the highest possible performance it is possible to operate the sensor without a (protecting) front window. To measure a temperature based on Excelitas calibration constants no window between the sensor and

Excelitas Technologies GmbH & Co. KG
Wenzel-Jaksch-Str. 31
65199 Wiesbaden Germany
Tel.: +49 (0)611 492 430

the object must be used. Excelitas calibration values are only valid when the bare sensor is exposed to the object. As the device is equipped with a highly sensitive infra-red detector, it is sensitive any source of heat, direct or indirect. For a proper temperature measurement the device must be at the same temperature as the ambient. Sudden temperature changes will directly affect the behaviour of the internal calculations such as motion, presence and over-/under-temperature recognition. While slow variations of the sensor and ambient temperature may be tolerated for a proper function of the motion and presence features, a drift in the ambient temperature needs to be compensated for the over-/under-temperature feature as mentioned in the corresponding section. This device is equipped with a highly sensitive ADC and integrated circuits. Common rules of electronics integration apply. We recommend to place strong EMI sources far apart and/or to shield those.

10.4 Footprint

A proposal for a pad design is shown in drawing 26.

Figure 26: Proposal for pad dimensions in [mm]

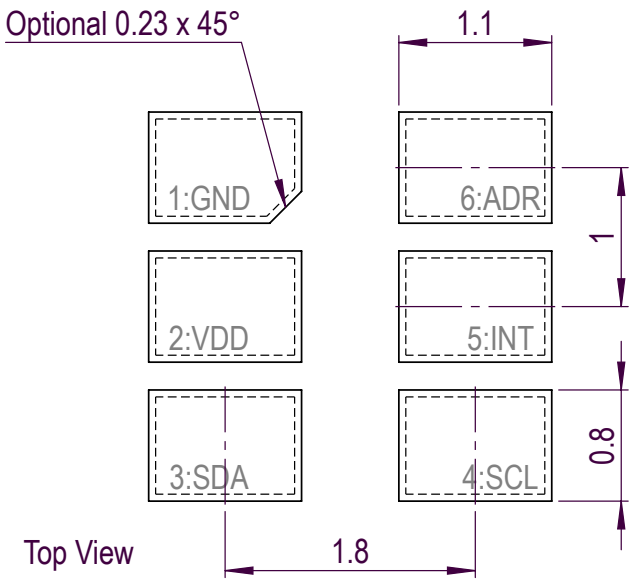

10.5 Re-flow soldering

The SMD package allows for automated pick-and-place procedures combined with a lead-free automated re-flow soldering process. A typical lead-free soldering profile is shown in the graph 27.

Excelitas Technologies GmbH & Co. KG
Wenzel-Jaksch-Str. 31
65199 Wiesbaden Germany
Tel.: +49 (0)611 492 430

Figure 27: Typical lead free soldering profile.

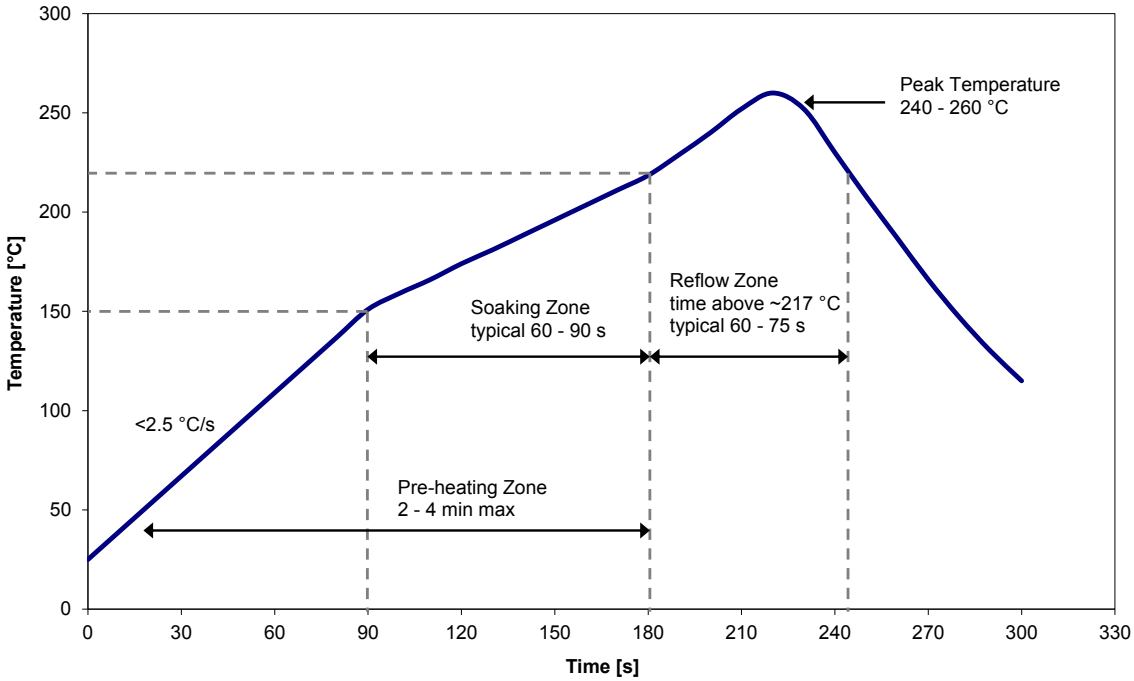

Excelitas Technologies GmbH & Co. KG
Wenzel-Jaksch-Str. 31
65199 Wiesbaden Germany
Tel.: +49 (0)611 492 430

11 Packaging Specification

11.1 General Information

The Excelitas Technologies Tape and Reel packing system protects the product from mechanical and electrical damage and is designed for automatic pick-and-place equipment.
The Tape and Reel packing system consists of a Carrier Tape sealed with a protective Cover Tape to hold the devices in place. The devices are loaded with leads down, into the carrier pockets. The tape is wound onto a plastic reel and the loose end of the carrier tape is kept in place by an additional protective band. The protective band also acts as an reinforcement of the plastic reel to avoid deformation after vacuuming. The conductive carrier tape, and antistatic coated transparent cover tape and reel provide ESD protection.
Information labels, ESD labels and bar-code labels (optional), desiccant, humidity indicator card, all are placed on each reel. Single reel of components are inserted into moisture barrier bag and then vacuumed, regardless of the specified MSL level. Additional Information labels are pasted on the vacuumed moisture barrier bags, which is then wrapped in bubble foil and then placed into boxes before shipping.
Excelitas Technologies' tape and reel specifications are in conformance with the EIA Standard 481 "Taping of Surface-Mount Components for Automatic Placement."

11.2 Carrier Tape

Figure 28 shows the basic outline and dimension labels of the carrier tape. Typically, the carrier tape is constructed from conductive Polystyrene (IV). The uniform film thickness t is 0.3 mm. The Reel size is 10 inches or 13 inches with a maximum quantity per reel of 1000 pieces or 3000 pieces.

Figure 28: Tape and reel specifications. Package dimensions are given in table 50

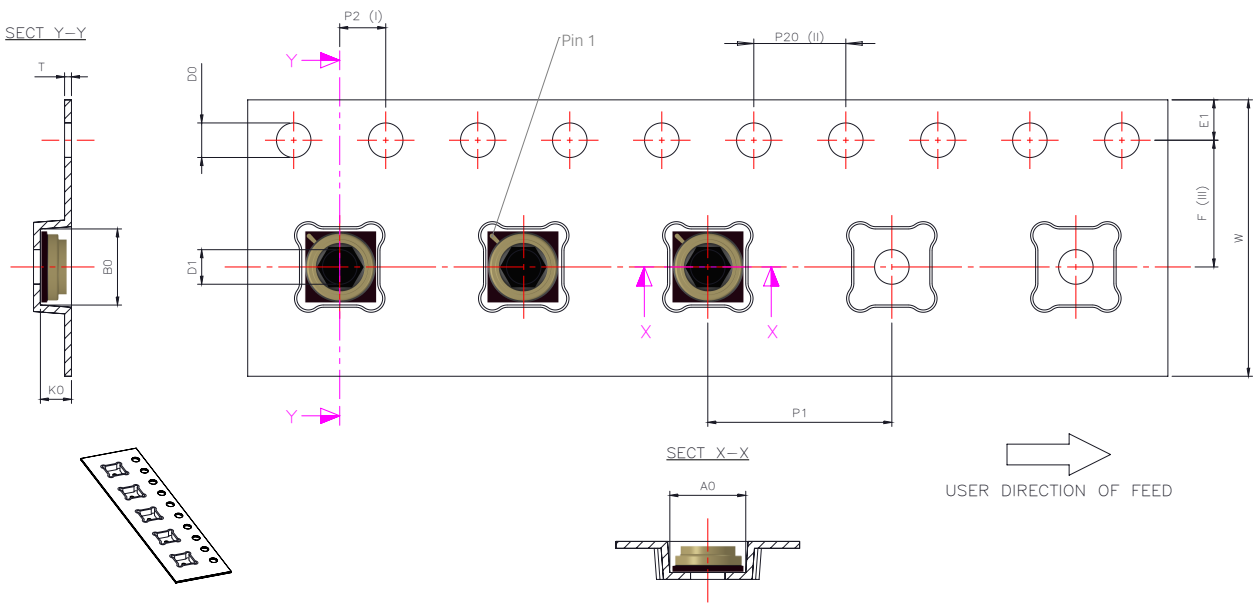

Table 50: Dimensions for figure 28 are given in [mm].

Device	A0	B0	E1	K0	F	P1	W	PO	P2	D0	D1	t
3.1 × 3.1 × 1.75	3.3	3.3	1.75	1.35	5.5	8	12	4	2	1.5	1.5	0.3

Excelitas Technologies GmbH & Co. KG
Wenzel-Jaksch-Str. 31
65199 Wiesbaden Germany
Tel.: +49 (0)611 492 430

Figure 29: Packaging specifications

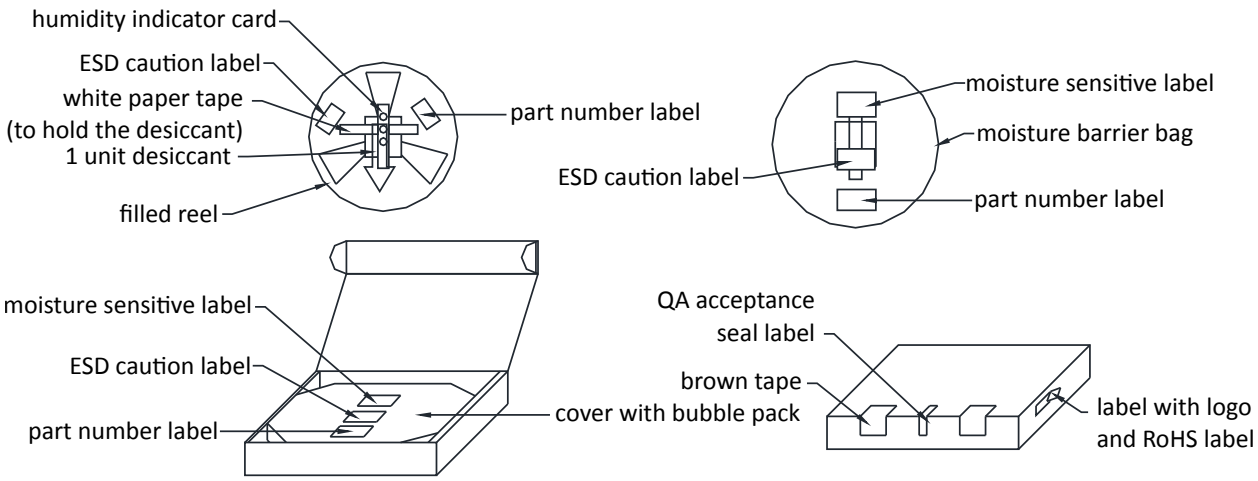

Excelitas Technologies GmbH & Co. KG
Wenzel-Jaksch-Str. 31
65199 Wiesbaden Germany
Tel.: +49 (0)611 492 430

12 Statements

Patents For several features of the CaliPile™patents have been granted.

Quality Excelitas Technologies is a ISO 9001:2015 certified manufacturer with established SPC and TQM.
Excelitas Technologies is certified for it's Environmental Management System according to ISO 14001:2015 and for the Occupational Safety and Health Management System according to ISO 45001:2018.
All devices employing PCB assemblies are manufactured according IPC-A-610 class 2 guidelines.
The infra-red detection product line is certified for ANSI/ESD S.20.20:2014.

Moisture Sensitivity Level This device has a moisture sensitivity level of 3 according to IPC/JEDEC J-STD-20E. If moisture-sensitive components have been exposed to ambient air for longer than the specified time according to their MSL rating, or if the humidity indicator card indicates too much moisture after opening a Moisture Barrier Bag (MBB), then the components are required to be baked prior to the assembly process. To determine allowable maximum temperature, see the imprints/labels on the respective packing.

Water Resistance The sensor was tested to withstand a pressure of 2 bar for 1 hour and 5 bar for 10 minutes while being constantly submerged in water at a temperature of $(22.0 \pm 2.5)\,°C$. The test is in accordance with IEC60529 IPX8 and ISO22810 standards.

Electrostatic Discharge Performance All pins pass the electrostatic discharge sensitivity (ESD) test level 1 (± 2 kV) according to IEC 61000-4-2. Please make sure not to confuse this norm with other norms such as ANSI/ESDA-JEDEC JS-001-2010 (Human Body Model), ESD DS5.3.1 (Charge Device Model) or ESD STM5.2 (Machine Model).

RoHS This sensor is a lead-free component and complies with the current RoHS regulations, especially with existing road-maps of lead-free soldering.

Liability Policy The contents of this document are subject to change. The details of this document are valid by the specified revision date. Excelitas reserves the right to change at any time total or part of the content of this specifications without individual notification. Customers should consult with Excelitas Technologies' representatives to ensure updated specifications before ordering.
Customers considering the use of Excelitas Technologies devices in applications where failure may cause personal injury or property damage, or where extremely high levels of reliability are demanded, are requested to discuss their concerns with Excelitas Technologies representatives before such use.
The Company's responsibility for damages will be limited to the repair or replacement of defective product. As with any semiconductor device, pyroelectric sensors, thermopile sensors or modules have a certain inherent rate of failure. To protect against injury, damage or loss from such failures, customers are advised to incorporate appropriate safety design measures into their product.

Excelitas Technologies GmbH & Co. KG
Wenzel-Jaksch-Str. 31
65199 Wiesbaden Germany
Tel.: +49 (0)611 492 430