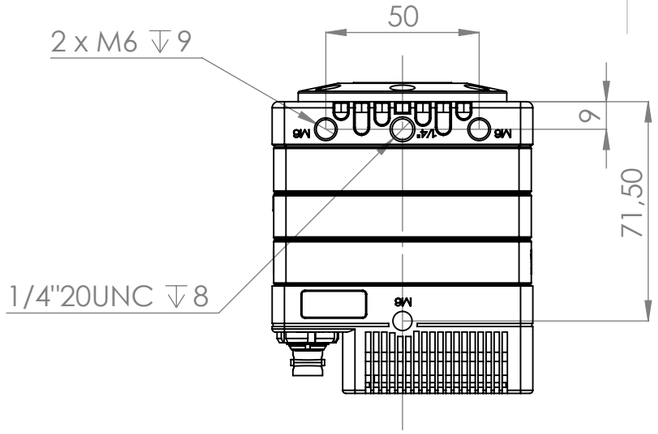

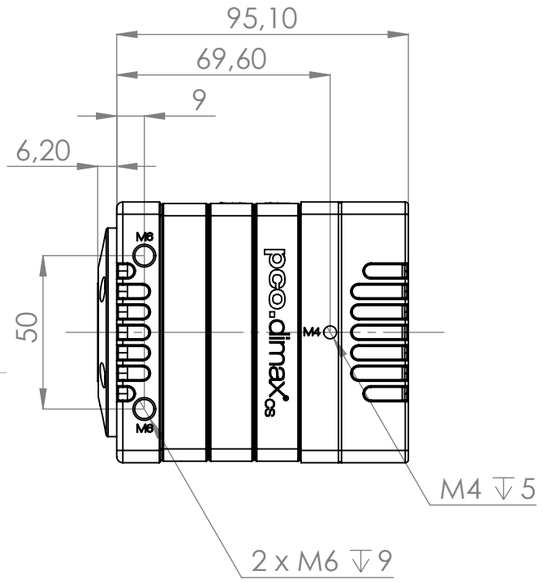

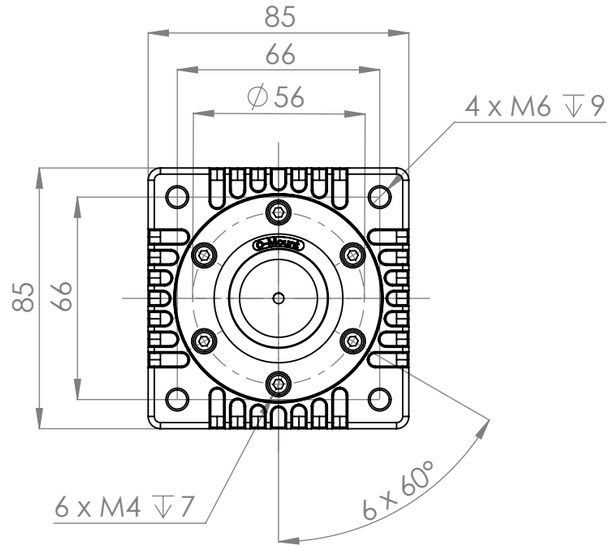

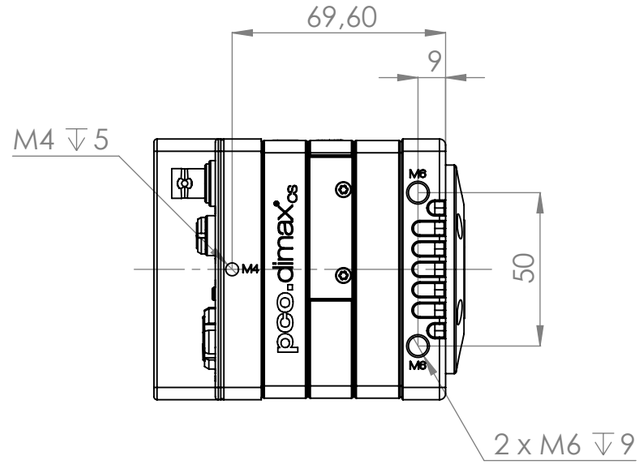

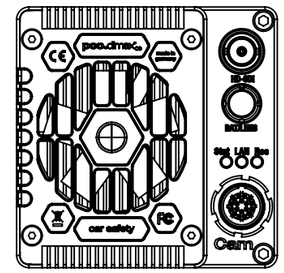

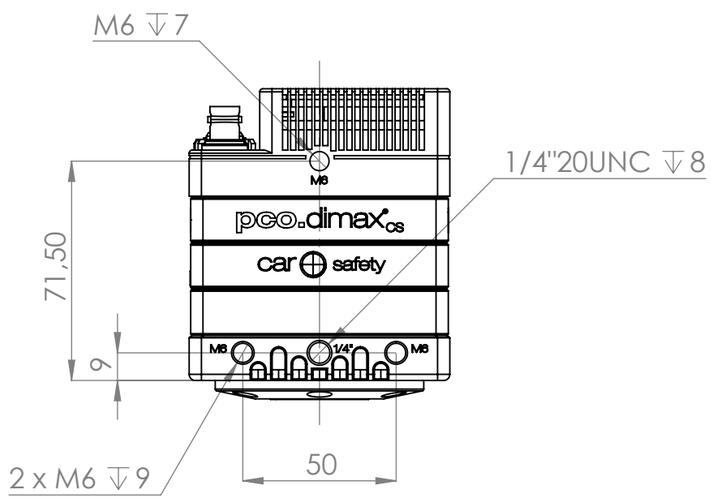

pco. www.pco.de	PCO AG Donaupark 11 93309 Kelheim, Germany +49 (0)9441 2005 0 info@pco.de	scale 1:2	This drawing is the property of PCO AG and must not be reproduced either wholly or partly. All rights in respect of patents, designs and copyrights are reserved. © 2018
			camera: pco.dimax model: dimax CS mono
		size A3	
		all dimensions in mm	rev.: 1.00 date: 18.10.2018 Sheet 1/2

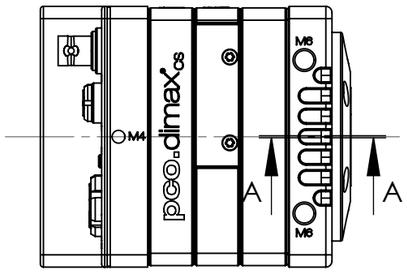

C-Mount

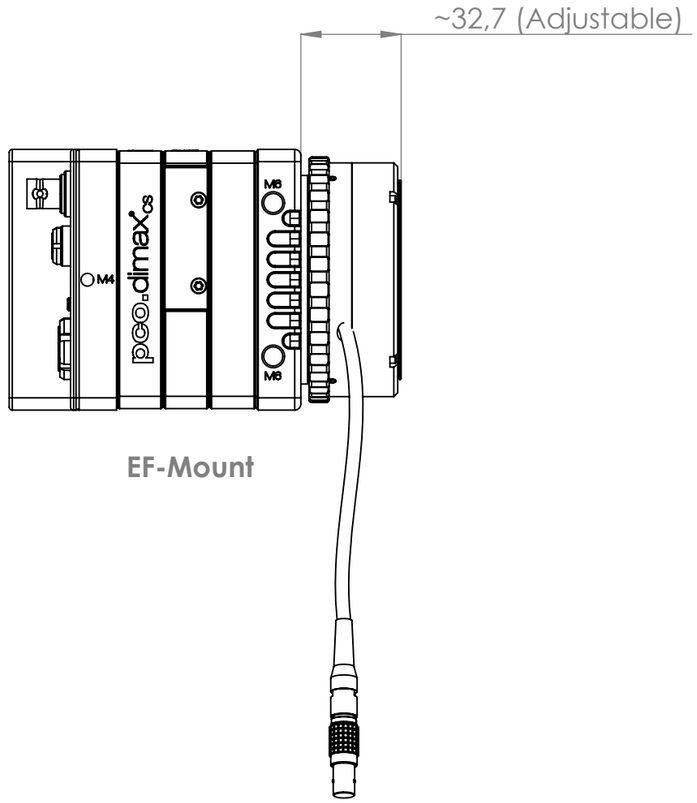

EF-Mount

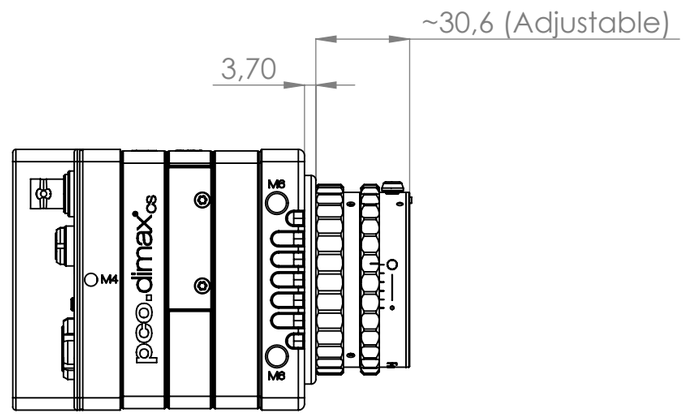

F-Mount

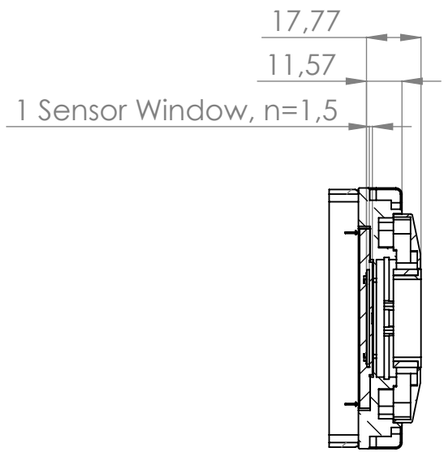

Section A-A

pco.
www.pco.de

PCO AG
Donaupark 11
93309 Kelheim, Germany
+49 (0)9441 2005 0
info@pco.de

scale 1:2

This drawing is the property of PCO AG and must not be reproduced either wholly or partly. All rights in respect of patents, designs and copyrights are reserved. © 2018

camera: pco.dimax
model: dimax CS mono

size A3

all dimensions in mm

rev.: 1.00 **date:** 18.10.2018

Sheet 2/2